CINTERION
WIRELESS MODULES

AT Command Set

TC65i

Version: 01.100
DocId: TC65i_ATC_V01.100

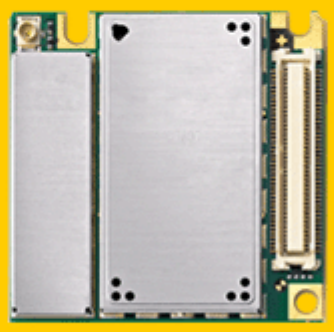

Document Name:	**TC65i AT Command Set**
Version:	**01.100**
Date:	**November 10, 2008**
DocId:	**TC65i_ATC_V01.100**
Status	**Confidential / Released**

GENERAL NOTE
THE USE OF THE PRODUCT INCLUDING THE SOFTWARE AND DOCUMENTATION (THE "PRODUCT") IS SUBJECT TO THE RELEASE NOTE PROVIDED TOGETHER WITH PRODUCT. IN ANY EVENT THE PROVISIONS OF THE RELEASE NOTE SHALL PREVAIL. THIS DOCUMENT CONTAINS INFORMATION ON CINTERION PRODUCTS. THE SPECIFICATIONS IN THIS DOCUMENT ARE SUBJECT TO CHANGE AT CINTERION'S DISCRETION. CINTERION WIRELESS MODULES GMBH GRANTS A NON-EXCLUSIVE RIGHT TO USE THE PRODUCT. THE RECIPIENT SHALL NOT TRANSFER, COPY, MODIFY, TRANSLATE, REVERSE ENGINEER, CREATE DERIVATIVE WORKS; DISASSEMBLE OR DECOMPILE THE PRODUCT OR OTHERWISE USE THE PRODUCT EXCEPT AS SPECIFICALLY AUTHORIZED. THE PRODUCT AND THIS DOCUMENT ARE PROVIDED ON AN "AS IS" BASIS ONLY AND MAY CONTAIN DEFICIENCIES OR INADEQUACIES. TO THE MAXIMUM EXTENT PERMITTED BY APPLICABLE LAW, CINTERION WIRELESS MODULES GMBH DISCLAIMS ALL WARRANTIES AND LIABILITIES. THE RECIPIENT UNDERTAKES FOR AN UNLIMITED PERIOD OF TIME TO OBSERVE SECRECY REGARDING ANY INFORMATION AND DATA PROVIDED TO HIM IN THE CONTEXT OF THE DELIVERY OF THE PRODUCT. THIS GENERAL NOTE SHALL BE GOVERNED AND CONSTRUED ACCORDING TO GERMAN LAW.

Copyright
Transmittal, reproduction, dissemination and/or editing of this document as well as utilization of its contents and communication thereof to others without express authorization are prohibited. Offenders will be held liable for payment of damages. All rights created by patent grant or registration of a utility model or design patent are reserved.

Copyright © 2008, Cinterion Wireless Modules GmbH

Trademark Notice
Bluetooth™ is a registered trademark of Bluetooth SIG Inc.

Microsoft and Windows are either registered trademarks or trademarks of Microsoft Corporation in the United States and/or other countries. All other registered trademarks or trademarks mentioned in this document are property of their respective owners.

Contents

1. Introduction 14
1.1 Scope of the document 14
1.2 Related documents 15
1.3 Document conventions 16
1.3.1 Quick reference table 16
1.3.2 Superscript notation for parameters and values 17
1.4 AT Command Syntax 18
1.4.1 Using Parameters 18
1.4.2 Concatenating AT Commands 19
1.5 Communication between Customer Application and TC65i 20
1.6 Supported character sets 21
1.6.1 GSM alphabet tables and UCS2 character values 22
1.6.2 UCS2 and GSM data coding and conversion for SMS text mode and Remote SAT 24
1.6.2.1 Implementing output of SIM data to Terminal (direction TA to TE) 24
1.6.2.2 Implementing input of Terminal data to SIM (direction TE to TA) 25
1.7 Unsolicited Result Code Presentation 26
1.8 Errors and Messages 27
1.9 Auxiliary Serial Interface 28
1.10 Serial Interface Flow Control 29
1.10.1 Software Flow Control (XON/OFF Handshake) 29
1.10.2 Hardware Flow Control (RTS/CTS Handshake) 29
1.11 Common PCN Handset Specification (CPHS) 31

2. Configuration Commands 32
2.1 AT&F Set all current parameters to manufacturer defaults 32
2.2 AT&V Display current configuration 33
2.2.1 AT&V responses 34
2.3 AT&W Stores current configuration to user defined profile 36
2.4 ATQ Result code presentation mode 37
2.5 ATV Result code format mode 38
2.5.1 Verbose and numeric result codes 38
2.6 ATX Set CONNECT result code format and call monitoring 39
2.7 AT\V Set CONNECT result code format 40
2.8 ATZ Set all current parameters to user defined profile 41
2.9 AT+CFUN Set phone functionality 42
2.9.1 Wake up the ME from SLEEP mode 45
2.10 AT^SMSO Switch off mobile station 46
2.11 AT+GCAP Request complete TA capabilities list 47
2.12 AT+CMEE Mobile Equipment Error Message Format 48
2.12.1 CME/CMS Error Code Overview 49
2.13 AT+CSCS Select TE character set 56
2.14 AT^SCFG Extended Configuration Settings 57
2.15 AT^SM20 Set M20 compatibility mode 83

3. Status Control Commands 84
3.1 AT+CMER Mobile Equipment Event Reporting 84

3.2 AT+CIND Indicator control ... 86
3.3 AT^SIND Extended Indicator Control ... 89
3.4 AT+CEER Extended Error Report ... 98
3.4.1 Cause Location ID for the extended error report ... 99
3.4.2 Proprietary L2 cause ... 100
3.4.3 GSM release cause for L3 Radio Resource (RR) ... 100
3.4.4 Proprietary release cause for L3 Radio Resource (RR) ... 101
3.4.5 GSM release cause for Mobility Management (MM) or Session Management (SM) ... 101
3.4.6 Proprietary release cause for L3 Mobility Management (MM) ... 102
3.4.7 GSM release cause for L3 Call Control (CC) ... 103
3.4.8 Proprietary release cause for L3 Call Control (CC) ... 104
3.4.9 GSM Release cause for Supplementary Service Call ... 104
3.4.10 GSM release cause for Session Management (SM) ... 106
3.4.11 GSM cause for L3 Protocol module or other local cause ... 106
3.4.12 Proprietary release cause for GPRS API ... 106
3.4.13 Proprietary release cause for PPP/IP-Stack ... 106
3.5 ATS18 Extended call release report ... 107
3.6 AT+CPAS Mobile equipment activity status ... 109
3.7 AT+WS46 Select wireless network ... 110

4. Serial Interface Control Commands ... 111
4.1 ATE Enable command echo ... 111
4.2 AT&C Set Data Carrier Detect (DCD) Line mode ... 112
4.3 AT&D Set Data Terminal Ready (DTR) line mode ... 113
4.4 AT&S Set Data Set Ready (DSR) line mode ... 114
4.5 AT\Q Flow control ... 115
4.6 AT+IFC Flow Control ... 116
4.7 AT+ICF Character Framing ... 118
4.8 AT+ILRR Set TE-TA local rate reporting ... 120
4.9 AT+IPR Bit Rate ... 122
4.9.1 Autobauding ... 123
4.10 AT+CMUX Multiplex Mode ... 125
4.10.1 Restrictions on Multiplex mode ... 126
4.11 AT^STPB Transmit Parity Bit (for 7E1 and 7O1 only) ... 128

5. Security Commands ... 129
5.1 AT+CPIN PIN Authentication ... 129
5.1.1 What to do if PIN or password authentication fails? ... 131
5.2 AT+CPIN2 PIN2 Authentication ... 133
5.3 AT^SPIC Display PIN counter ... 135
5.4 AT+CLCK Facility lock ... 139
5.5 AT^SLCK Facility lock ... 144
5.6 AT+CPWD Change Password ... 145
5.7 AT^SPWD Change Password ... 149
5.8 AT^SCSL Customer SIM Lock ... 151

6. Identification Commands ... 155
6.1 ATI Display product identification information ... 155
6.2 AT+CGMI Request manufacturer identification ... 156
6.3 AT+GMI Request manufacturer identification ... 156

6.4 AT+CGMM Request model identification 157
6.5 AT+GMM Request model identification 157
6.6 AT+CGMR Request revision identification of software status 158
6.7 AT+GMR Request revision identification of software status 158
6.8 AT+CGSN Request International Mobile Equipment Identity (IMEI) 159
6.9 AT+GSN Request International Mobile Equipment Identity (IMEI) 159
6.10 AT+CIMI Request International Mobile Subscriber Identity (IMSI) 160

7. Call related Commands 161
7.1 Call Status Information 161
7.2 ATA Answer a call 162
7.3 ATD Mobile originated call to specified number 163
7.4 ATD><mem><n> Mobile originated call using specific memory and index number 165
7.5 ATD><n> Mobile originated call from active memory using index number 167
7.6 ATD><str> Mobile originated call from active memory using corresponding field 168
7.7 ATDI Mobile originated call to ISDN number 169
7.8 ATDL Redial last number used 170
7.9 ATH Disconnect existing connection 171
7.10 AT+CHUP Hang up call 172
7.11 AT^SHUP Hang up call(s) indicating a specific GSM04.08 release cause 173
7.12 ATS0 Set number of rings before automatically answering a call 175
7.13 ATS2 Set escape sequence character 176
7.14 ATS6 Set pause before blind dialing 177
7.15 ATS7 Set number of seconds to wait for connection completion 178
7.16 ATS8 Set number of seconds to wait for comma dialing modifier 179
7.17 ATS10 Set disconnect delay after indicating the absence of data carrier 180
7.18 ATO Switch from command mode to data mode / PPP online mode 181
7.19 +++ Switch from data mode or PPP online mode to command mode 182
7.20 AT+CBST Select bearer service type 183
7.21 AT+CRLP Select radio link protocol parameters for originated non-transparent data calls 185
7.22 AT+CLCC List of current calls 186
7.23 AT^SLCC Extended list of current calls 188
7.24 AT+CR Service reporting control 193
7.25 AT+CRC Set Cellular Result Codes for incoming call indication 194
7.26 AT+CSNS Single Numbering Scheme 195
7.27 AT^SCNI List Call Number Information 196
7.28 AT^SLCD Display Last Call Duration 197
7.29 AT^STCD Display Total Call Duration 198
7.30 ATP Select pulse dialing 199
7.31 ATT Select tone dialing 199

8. Network Service Commands 200
8.1 AT+COPN Read operator names 200
8.2 AT+COPS Operator Selection 201
8.3 AT^SOPS Extended Operator Selection 204
8.4 AT+CREG Network registration 206
8.5 AT+CSQ Signal quality 209
8.6 AT^SMONC Cell Monitoring 210
8.7 AT^SMOND Cell Monitoring 212
8.8 AT^SFNUR Select the fixed network user rate 215

8.9 AT^MONI Monitor idle mode and dedicated mode ... 216
8.9.1 AT^MONI responses ... 217
8.9.2 Service states ... 218
8.10 AT^MONP Monitor neighbor cells ... 219
8.10.1 AT^MONP responses ... 220
8.11 AT^SMONG GPRS Monitor ... 221
8.11.1 AT^SMONG Cell Info Table ... 222
8.12 AT^SALS Alternate Line Service ... 223
8.13 AT^SHOM Display Homezone ... 225
8.14 AT^SPLM Read the PLMN list ... 226
8.15 AT+CPOL Preferred Operator List ... 228

9. Supplementary Service Commands ... 229
9.1 AT+CACM Accumulated call meter (ACM) reset or query ... 229
9.2 AT^SACM Advice of charge and query of ACM and ACMmax ... 230
9.3 AT+CAMM Accumulated call meter maximum (ACMmax) set or query ... 232
9.4 AT+CAOC Advice of Charge information ... 233
9.5 AT+CCUG Closed User Group ... 234
9.6 AT+CCFC Call forwarding number and conditions control ... 236
9.7 AT+CCWA Call Waiting ... 240
9.8 AT+CHLD Call Hold and Multiparty ... 244
9.9 AT+CLIP Calling Line Identification Presentation ... 246
9.10 AT+CLIR Calling Line Identification Restriction ... 248
9.11 AT+COLP Connected Line Identification Presentation ... 249
9.12 AT+CPUC Price per unit and currency table ... 251
9.13 AT+CSSN Supplementary service notifications ... 253
9.14 AT+CUSD Unstructured supplementary service data ... 255

10. Internet Service Commands ... 257
10.1 AT^SICS Internet Connection Setup Profile ... 260
10.1.1 Example: Default values of a CSD connection profile ... 263
10.1.2 Example: GPRS connection profile ... 264
10.2 AT^SICI Internet Connection Information ... 265
10.2.1 Checking Connection Profile Status ... 266
10.3 AT^SISS Internet Service Setup Profile ... 268
10.4 AT^SISI Internet Service Information ... 277
10.5 AT^SISO Internet Service Open ... 279
10.5.1 Example: Accepting / Rejecting Socket Connection Request from Remote Client ... 283
10.6 AT^SISC Internet Service Close ... 285
10.7 AT^SISR Internet Service Read Data ... 286
10.7.1 Example: Socket Host Reads Small Amounts of UDP Data Packets (URC Mode) ... 288
10.8 AT^SISW Internet Service Write Data ... 289
10.8.1 Usage of parameter <eodFlag> ... 291
10.9 AT^SICO Internet Connection Open ... 293
10.10 AT^SICC Internet Connection Close ... 295
10.11 AT^SISX Internet Service Execution ... 296
10.11.1 Example: Ping ... 298
10.12 AT^SISE Internet Service Error Report ... 299
10.13 Internet Service URC "^SIS" ... 300
10.13.1 Information Elements Related to the Service Application ... 301

10.13.2 Information Elements Related to FTP Service ... 302
10.13.3 Information Elements Related to HTTP Service ... 303
10.13.4 Information Elements Related to POP3 Service ... 303
10.13.5 Information Elements Related to SMTP Service ... 303
10.14 Examples of how to Configure and Use Internet Service Profiles ... 304
10.14.1 Selecting URC Mode or Polling Mode ... 304
10.14.2 Configuring Socket Listener ... 304
10.14.3 Configuring Socket Client for Calling a Socket Listener on Another Host ... 305
10.14.4 Socket Client Sends Data via TCP Connection (Polling Mode) ... 305
10.14.5 Socket client sends data via TCP connection with URCs ... 306
10.14.6 Socket Scenario with UDP Endpoint ... 306
10.14.7 Configuring and Using FTP Download (URC Mode) ... 308
10.14.8 Configuring and Using FTP Upload (URC Mode) ... 308
10.14.9 Configuring SMPT Service Profile ... 309
10.14.10 Sending Email (URC Mode) ... 310
10.14.11 Sending Email (Polling Mode) ... 310
10.14.12 Configuring POP3 Service Profile ... 311
10.14.13 Retrieving Email (URC Mode) ... 313
10.14.14 Retrieving Email (Polling Mode) ... 313
10.14.15 HTTP POST (Polling Mode) ... 314
10.14.16 HTTP GET (Polling Mode) ... 315

11. GPRS Commands ... 316
11.1 AT+CGACT PDP context activate or deactivate ... 316
11.2 AT+CGANS Manual response to a network request for PDP context activation ... 318
11.3 AT+CGATT GPRS attach or detach ... 320
11.4 AT+CGAUTO Automatic response to a network request for PDP context activation ... 321
11.5 AT+CGDATA Enter data state ... 323
11.5.1 Automatic deactivation of PDP context during dial-up PPP ... 324
11.6 AT+CGDCONT Define PDP Context ... 325
11.7 AT+CGEQMIN Rel. 99 Quality of Service Profile (Minimum acceptable) ... 327
11.8 AT+CGEQREQ Rel. 99 Quality of Service Profile (Requested) ... 331
11.9 AT+CGPADDR Show PDP address ... 335
11.10 AT+CGQMIN Quality of Service Profile (Minimum acceptable) ... 336
11.11 AT+CGQREQ Quality of Service Profile (Requested) ... 340
11.12 AT+CGREG GPRS Network Registration Status ... 344
11.13 AT+CGSMS Select service for MO SMS messages ... 346
11.14 AT^SGACT Query all PDP context activations ... 347
11.15 AT^SGAUTH Set type of authentication for PPP connection ... 349
11.16 AT^SGCONF Configuration of GPRS related Parameters ... 350
11.17 ATA Manual response to a network request for PDP context activation ... 351
11.18 ATD*99# Request GPRS service ... 352
11.19 ATD*98# Request GPRS IP service ... 353
11.20 ATH Manual rejection of a network request for PDP context activation ... 354
11.21 ATS0 Automatic response to a network request for PDP context activation ... 355
11.22 Using GPRS AT commands (Examples) ... 356
11.23 Using the GPRS dial command ATD ... 358

12. FAX Commands ... 359
12.1 FAX parameters ... 359

12.1.1 Fax Result Codes 359
12.2 AT+FCLASS Fax: Select, read or test service class 360
12.3 AT+FRH Receive Data Using HDLC Framing 361
12.4 AT+FRM Receive Data 362
12.5 AT+FRS Receive Silence 363
12.6 AT+FTH Transmit Data Using HDLC Framing 364
12.7 AT+FTM Transmit Data 365
12.8 AT+FTS Stop Transmission and Wait 366

13. Short Message Service (SMS) Commands 367
13.1 SMS parameters 367
13.2 AT+CMGC Send an SMS command 372
13.3 AT+CMGD Delete short message 373
13.4 AT+CMGF Select SMS message format 374
13.5 AT+CMGL List SMS messages from preferred store 375
13.6 AT+CMGR Read SMS messages 377
13.7 AT+CMGS Send Short Message 379
13.8 AT+CMGW Write Short Messages to Memory 381
13.9 AT+CMSS Send short messages from storage 383
13.10 AT+CNMA New Message Acknowledgement to ME/TE, only phase 2+ 384
13.11 AT+CNMI New short Message Indication 385
13.12 AT+CPMS Preferred SMS message storage 388
13.13 AT+CSCA SMS Service Center Address 390
13.14 AT+CSCB Select Cell Broadcast Message Indication 391
13.15 AT+CSDH Show SMS text mode parameters 392
13.16 AT+CSMP Set SMS text Mode Parameters 393
13.17 AT+CSMS Select Message Service 395
13.18 AT^SCML List Concatenated Short Messages from preferred store 397
13.19 AT^SCMR Read Concatenated Short Messages 398
13.20 AT^SCMS Send Concatenated Short Messages 399
13.21 AT^SCMW Write Concatenated Short Messages to Memory 400
13.22 AT^SLMS List SMS Memory Storage 401
13.23 AT^SMGL List Short Messages from preferred store without setting status to REC READ 402
13.24 AT^SMGO Set or query SMS overflow presentation mode or query SMS overflow 403
13.25 AT^SMGR Read short message without setting status to REC READ 405
13.26 AT^SSCONF SMS Command Configuration 406
13.27 AT^SSDA Set SMS Display Availability 407
13.28 AT^SSMSS Set Short Message Storage Sequence 408

14. SIM related Commands 409
14.1 AT+CRSM Restricted SIM Access 409
14.2 AT+CSIM Generic SIM Access 412
14.3 AT^SATR Query SIM's Answer to Reset Data 414
14.4 AT^SXSM Extended SIM Access 415
14.5 AT^SCKS Query SIM and Chip Card Holder Status 417
14.6 AT^SSET Indicate SIM data ready 419
14.7 AT^SCID Display SIM card identification number 420
14.8 AT+CXXCID Display card ID 421

15. Remote SIM Access (RSA) Commands 422
15.1 AT^SRSA Remote SIM Access Activation 425
15.2 AT^SRSM Remote SIM Access Message 429
15.2.1 SAP Request Message Parameters 432
15.2.2 SAP Response Message Parameters 432
15.3 Related AT Commands 433
15.3.1 Establishing an RSA Connection in a PC Environment 433
15.3.2 Bluetooth scenario (SAP) 433
15.3.3 Serial Interface Scenario (XSAP) 434
15.3.4 RSA Connection via Java application 434

16. SIM Application Toolkit (SAT) Commands 435
16.1 AT^SSTA SAT Interface Activation 435
16.2 ^SSTN SAT Notification 437
16.3 AT^SSTGI SAT Get Information 438
16.4 AT^SSTR SAT Response 439

17. Phonebook Commands 441
17.1 Sort Order for Phonebooks 441
17.2 AT+CNUM Read own numbers 442
17.3 AT+CPBR Read from Phonebook 443
17.4 AT+CPBS Select phonebook memory storage 446
17.5 AT+CPBW Write into Phonebook 448
17.6 AT^SPBW Write into Phonebook with location report 451
17.7 AT^SDLD Delete the 'last number redial' memory 454
17.8 AT^SPBC Find first matching entry in sorted phonebook 455
17.9 AT^SPBD Purge phonebook memory storage 456
17.10 AT^SPBG Display phonebook entries in alphabetical order 457
17.11 AT^SPBS Step through the selected phonebook alphabetically 460

18. Audio Commands 464
18.1 Audio programming model 464
18.2 ATL Set monitor speaker loudness 465
18.3 ATM Set monitor speaker mode 465
18.4 AT+CLVL Loudspeaker volume level 466
18.5 AT+CMUT Mute control 467
18.6 AT+VTD Tone duration 468
18.7 AT+VTS DTMF and tone generation 469
18.8 AT^SAIC Audio Interface Configuration 470
18.9 AT^SNFA Set or query of microphone attenuation 472
18.10 AT^SNFD Set audio parameters to manufacturer default values 474
18.11 AT^SNFG Generate Tone 475
18.12 AT^SNFI Set microphone path parameters 477
18.13 AT^SNFM Set microphone audio path and power supply 478
18.14 AT^SNFO Set audio output (= loudspeaker path) parameter 480
18.15 AT^SNFPT Set progress tones 482
18.16 AT^SNFS Select audio hardware set 483
18.17 AT^SNFTTY Signal TTY/CTM audio mode capability 486
18.18 AT^SNFV Set loudspeaker volume 488
18.19 AT^SNFW Write audio setting in non-volatile store 489

18.20 AT^SRTC Ring tone configuration 490

19. Hardware related Commands 492
19.1 AT+CCLK Real Time Clock 492
19.2 AT+CALA Set alarm time 493
19.3 AT^SBC Battery Charge Control 496
19.3.1 Responses returned by read command 498
19.4 AT^SBV Battery/Supply Voltage 499
19.5 AT^SCTM Set critical operating temperature presentation mode or query temperature 500
19.5.1 Deferred shutdown 502
19.6 AT^SSYNC Configure SYNC Pin 503
19.6.1 ME status indicated by status LED patterns 504
19.7 AT^SSPI Serial Protocol Interface 506
19.7.1 Specifying Delay Time for I²C 508
19.7.2 Selecting SPI Mode 509
19.7.3 Transmitting Data over AT Interface 510
19.7.3.1 Structure of Messages on the I²C Bus 511
19.7.3.2 Structure of Messages on the SPI 512
19.7.4 Error Handling on the I²C Bus 512
19.7.5 Example: Using I²C Bus 514
19.7.6 Example: Transfer and Response Messages on SPI 515
19.8 AT^SAADC Show ADC Adjustment Values 516
19.9 AT^SRADC Configure and Read ADC Measurement 518
19.10 AT^SWDAC Configure and Read PWM Signal for DAC 521

20. GPIO Commands 523
20.1 AT^SPIO General Purpose IO Driver Open/Close 523
20.2 AT^SCPIN Pin Configuration 524
20.3 AT^SCPOL Polling Configuration 526
20.4 AT^SCPORT Port Configuration 528
20.5 AT^SDPORT Delete a Port Configuration 529
20.6 AT^SGIO Get IO state of a specified pin or port 530
20.7 AT^SSIO Set IO state of a specified pin or port 531
20.8 AT^SCCNT Configure Pulse Counter 532
20.8.1 Using the Pulse Counter in Limit Counter Mode 533
20.9 AT^SSCNT Start and Stop Pulse Counter 534
20.9.1 Using the Pulse Counter in Start-Stop Counter Mode 535

21. Java related Commands 536
21.1 AT^SJRA Run Java Application 536
21.2 AT^SJNET Set Dialup Network Access Parameters 537
21.3 AT^SJOTAP Over The Air Application Provisioning 540
21.4 AT^SJSEC Write Binary Java Security Data 543

22. Miscellaneous Commands 545
22.1 A/ Repeat previous command line 545
22.2 ATS3 Set command line termination character 546
22.3 ATS4 Set response formatting character 547
22.4 ATS5 Write command line editing character 548
22.5 AT^SFDL Enter Firmware Download Mode 549

23. Appendix 551
23.1 Restricted access to SIM data after SIM PIN authentication 551
23.2 Star-Hash (*#) Network Commands 552
23.3 Available AT Commands and Dependency on SIM PIN 555
23.4 Availability of AT Commands Depending on Operating Mode of ME 562
23.5 AT Command Settings storable with AT&W 570
23.6 Factory Default Settings Restorable with AT&F 573
23.7 Summary of Unsolicited Result Codes (URC) 576
23.8 AT Commands not usable for USB 579
23.9 Alphabetical List of AT Commands 580

List of Tables

Table 1.1: Symbols used to mark the type of parameters 17
Table 1.2: Symbols used to indicate the correlations with other commands 17
Table 1.3: Symbols used to mark different types of default values of parameters 17
Table 1.4: Types of AT commands and responses 18
Table 1.5: Examples for character definitions depending on alphabet 21
Table 2.1: Current configuration on ASC0 / MUX channel 1 / USB (example) 34
Table 2.2: Current configuration on ASC1 and MUX channels 2 and 3 (example) 35
Table 2.3: Wake-up events in NON-CYCLIC and CYCLIC SLEEP modes 45
Table 2.4: General "CME ERROR" Codes (GSM 07.07) 49
Table 2.5: General "CME ERROR" Codes (proprietary) 50
Table 2.6: GPRS related "CME ERROR" Codes (GSM 07.07) 51
Table 2.7: GPRS related "CME ERROR" Codes (proprietary) 51
Table 2.8: SMS related "CMS ERROR" Codes (GSM 07.05) 53
Table 2.9: Java related "CME ERROR" Codes (proprietary) 55
Table 4.1: Availability of AT Commands on Virtual Channels 126
Table 4.2: Summary of AT commands with Different Behavior in Multiplex Mode 127
Table 10.1: Applicability of AT^SICS <conParmTag> values 260
Table 10.2: Applicability of AT^SISS <srvParmTag> values 268
Table 12.1: Fax Result Codes 359
Table 19.1: Modes of the LED and indicated ME functions 504
Table 19.2: Values for calculating the delay 508
Table 19.3: Special characters for ASCII coding 510
Table 19.4: Structure of Transfer and Response Messages on the I²C bus 511
Table 19.5: Structure of Transfer and Response Messages for SPI 512
Table 23.1: Star-Hash (*#) Command Overview 552
Table 23.2: Abbreviations of Codes and Parameters used in Table 23.1 553
Table 23.3: Star-Hash Command Response Parameters 554
Table 23.4: Star-Hash Commands for Supplementary Services 554
Table 23.5: Available AT Commands and Dependency on SIM PIN 555
Table 23.6: Availability of AT Commands Depending on Operating Mode of ME 562
Table 23.7: Settings Stored to User Profile on ASC0 / MUX Channel 1 570
Table 23.8: Settings Stored to User Profile on ASC1 / MUX Channels 2 and 3 571
Table 23.9: Factory Default Settings Restorable with AT&F 573
Table 23.10: Summary of Unsolicited Result Codes (URC) 576
Table 23.11: AT Commands not usable for USB 579
Table 23.12: Alphabetical List of AT Commands 580

List of Figures

Figure 1.1: Main character table of GSM 03.38 alphabet 22
Figure 1.2: Extension character table of GSM 03.38 alphabet 23
Figure 15.1: Basic Remote SIM Access Usage Scenario via Bluetooth 422
Figure 15.2: Basic Remote SIM Access usage scenario via RS232 422
Figure 15.3: SIM usage states of SAP server 423
Figure 15.4: SIM usage states of SAP client 424
Figure 18.1: Audio programming model for TC65i Module 464
Figure 19.1: Formula for calculating the delay 508
Figure 19.2: Delay time on I²C after Write 508
Figure 19.3: Delay time on I²C after Read 508
Figure 19.4: SPI modes selectable on SPI 509

1. Introduction

1.1 Scope of the document

This document presents the AT Command Set for
TC65i Release 01.100.

Before using the product or upgrading to a new firmware version please read the latest product information provided in the Release Notes [1].

More information is available at http://www.cinterion.com.

1.2 Related documents

[1] TC65i Release Notes, Version 01.100
[2] TC65i Hardware Interface Description, Version 01.100
[3] Java User's Guide
[4] Remote-SAT User's Guide
[5] GPRS Startup User's Guide
[6] Multiplexer User's Guide
[7] 3GPP TS 27.010 (GSM 07.10): Terminal Equipment to User Equipment (TE-UE) multiplexer protocol
[8] Multiplex Driver Developer's Guide for Windows 2000 and Windows XP
[9] Multiplex Driver Installation Guide for Windows 2000 and Windows XP
[10] Application Note 02: Audio Interface Design
[11] Application Note 16: Updating TC65i Firmware
[12] Application Note 17: Over-The-Air Firmware Update
[13] Application Note 22: Using TTY / CTM equipment with TC65i
[14] Application Note 24: Application Developer's Guide
[15] Application Note 32: Integrating USB into GSM Applications
[16] ISO/IEC10646: "Universal Multiple-Octet Coded Character Set (UCS)"; UCS2, 16 bit coding
[17] ITU-T Recommendation V.24: List of definitions for interchange circuits between data terminal equipment (DTE) and data circuit-terminating equipment (DCE)
[18] ITU-T Recommendation V.250: Serial asynchronous automatic dialling and control
[19] 3GPP TS 100 918/EN 300 918 (GSM 02.04): General on supplementary services
[20] 3GPP TS 100 907 (GSM 02.30): Man-Machine Interface (MMI) of the Mobile Station (MS)
[21] 3GPP TS 23.038 (GSM 03.38): Alphabets and language specific information
[22] 3GPP TS 27.005 (GSM 07.05): Use of Data Terminal Equipment - Data Circuit terminating Equipment (DTE - DCE) interface for Short Message Service (SMS) and Cell Broadcast Service (CBS)
[23] 3GPP TS 27.007 (GSM 07.07): AT command set for User Equipment (UE)
[24] 3GPP TS 27.060 (GSM 07.60): Mobile Station (MS) supporting Packet Switched Services
[25] 3GPP TS 51.011 (GSM11.11): Specification of the Subscriber Identity Module - Mobile Equipment (SIM - ME) interface
[26] 3GPP TS 11.14 (GSM 11.14): Specification of the SIM Application Toolkit for the Subscriber Identity Module - Mobile Equipment (SIM - ME) interface
[27] 3GPP TS 22.101 (GSM 22.101): Service principles
[28] Common PCN Handset Specification (CPHS) v4.2
[29] USB.ORG: www.usb.org/developers/docs/USB_LANGIDs.pdf

1.3 Document conventions

Throughout the document, the GSM engines are referred to as ME (Mobile Equipment), MS (Mobile Station), TA (Terminal Adapter), DCE (Data Communication Equipment) or facsimile DCE (FAX modem, FAX board).
To control your GSM engine you can simply send AT Commands via its serial interface. The controlling device at the other end of the serial line is referred to as TE (Terminal Equipment), DTE (Data Terminal Equipment) or plainly 'the application' (probably running on an embedded system).
All abbreviations and acronyms used throughout this document are based on the GSM specifications. For definitions please refer to TR 100 350 V7.0.0 (1999-08), (GSM 01.04, version 7.0.0 release 1998).

1.3.1 Quick reference table

Each AT command description includes a table similar to the example shown below. The table is intended as a quick reference to indicate the following functions:

PIN: Is the AT command PIN protected?
- **+** Yes
- **-** No
- **±** Usage is dependent on conditions specified for the command, or not all command types are PIN protected (for example write command PIN protected, read command not).

Note: The table provided in Section 23.3, `Available AT Commands and Dependency on SIM PIN` uses the same symbols.

ASC0: Is the AT command supported on the first physical serial interface ASC0?
- **+** Yes
- **-** No

ASC1: Is the AT command supported on the second physical serial interface ASC1?
- **+** Yes
- **-** No

USB: Is the AT command supported on the USB interface?
- **+** Yes
- **-** No

MUXn: Is the AT command usable on the Multiplexer channels MUX1, MUX2, MUX3?
- **+** Yes
- **-** No
- **±** AT command is usable, but under the restrictions specified in the section related to the command.

Note: The columns MUX1, MUX2 and MUX3 are relevant only when the GSM engine operates in Multiplexer mode, that is, when the first physical serial interface is partitioned into 3 virtual channels by using the Multiplexer protocol. Usage is the same on ASC0 and MUX1.

✈ Is the AT command supported in AIRPLANE mode?
- **+** Yes
- **-** No
- **±** In AIRPLANE mode, not all described functions are available. For example, the test or read command is usable, the write or execute command is not. Furthermore, only some of the listed parameters can be changed in AIRPLANE mode. A typical example is `AT^SCFG` that controls different features.

Charge: Is the AT command supported in CHARGE ONLY mode?
- **+** Yes
- **-** No
- **±** AT command is usable, but under the restrictions specified in the section related to the command.

Last: If commands are concatenated, this AT command must be the last one.
- **+** Yes
- **-** No

Note: See also Section 1.4, AT Command Syntax for details on concatenated AT commands.

Example:

PIN	ASC0	ASC1	USB	MUX1	MUX2	MUX3	Charge	✈	Last
-	+	+	+	±	±	±	+	-	-

1.3.2 Superscript notation for parameters and values

Table 1.1: Symbols used to mark the type of parameters

Parameter type	Meaning
<param>$^{(num)}$	Parameter value must be numeric type
<param>$^{(str)}$	Parameter value must be string type

Table 1.2: Symbols used to indicate the correlations with other commands

Parameter option	Meaning
<param>$^{(\&W)}$	Parameter value will be stored with AT&W
<param>$^{(\&V)}$	Parameter value will be displayed with AT&V
<param>$^{(\hat{}SNFW)}$	Parameter value will be stored with AT^SNFW
<param>$^{(+CSCS)}$	Parameter value has to be (is) coded according to current setting of <chset> (see AT+CSCS for details)

Table 1.3: Symbols used to mark different types of default values of parameters

Value option	Meaning
[x]	Default value: if the parameter is omitted, the value 'x' will be assumed
x$^{(\&F)}$	Factory default value, will be restored to 'x' with AT&F
x$^{(P)}$	Powerup default value of a parameter which is not stored at power down
x$^{(D)}$	Delivery default value of a parameter which cannot be restored automatically

1.4 AT Command Syntax

The "AT" or "at" prefix must be set at the beginning of each command line. To terminate a command line enter <CR>. Commands are usually followed by a response that includes "<CR><LF><response><CR><LF>". Throughout this document, only the responses are presented, <CR><LF> are omitted intentionally.

Table 1.4: Types of AT commands and responses

AT command type	Syntax	Function
Test command	AT+CXXX=?	The mobile equipment returns the list of parameters and value ranges set with the corresponding Write command or by internal processes.
Read command	AT+CXXX?	This command returns the currently set value of the parameter or parameters.
Write command	AT+CXXX=<...>	This command sets user-definable parameter values.
Exec(ution) command	AT+CXXX	The execution command reads non-variable parameters determined by internal processes in the GSM engine.

1.4.1 Using Parameters

- Optional parameters are enclosed in square brackets. If optional parameters are omitted, the current settings are used until you change them.
- Optional parameters or subparameters can be omitted unless they are followed by other parameters. If you want to omit a parameter in the middle of a string it must be replaced by a comma. See also example 1.
- A parameter value enclosed in square brackets represents the value that will be used if an optional parameter is omitted. See also example 2.
- When the parameter is a character string, e.g. <text> or <number>, the string must be enclosed in quotation marks, e.g. "Charlie Brown" or "+49030xxxx". Symbols in quotation marks will be recognized as strings.
- All spaces will be ignored when using strings without quotaton marks.
- It is possible to omit the leading zeros of strings which represent numbers.
- If an optional parameter of a V.250 command is omitted, its value is assumed to be 0.

Example 1: Omitting parameters in the middle of a string

```
AT+CCUG?                    Query current setting
+CCUG: 1,10,1
OK
AT+CCUG=,9                  Set only the middle parameter
OK
AT+CCUG?                    Query new setting
+CCUG: 1,9,1
OK
```

Example 2: Using default parameter values for optional parameters

```
AT+CFUN=7,0                 Activate CYCLIC SLEEP mode, don't reset ME
OK
AT+CFUN?                    Query ME mode
+CFUN: 7
OK
AT+CFUN=                    Set ME back to normal (default parameters: 1,0)
OK
+CFUN: 1
OK
```

1.4.2 Concatenating AT Commands

Concatenating AT commands on the same line is possible, though it is not recommended because of the restrictions listed below.
When concatenating AT commands you need to enter the "AT" or "at" prefix only once at the beginning of a command line. Use a semicolon as delimiter.

Disadvantages and restrictions:

- There is no way to control the minimum time to wait between finishing an AT command and sending the next one. Please refer to Section 1.5, Communication between Customer Application and TC65i for details about timing.
- The sequence of processing the AT commands may be different from the sequential order of command input.
- Many AT commands cannot be concatenated, especially those listed in the table below. Concatenating these commands might end up with an error result code, or leads to an unexpected order of responses.

AT command type	Comment
V.250 commands	Cannot be concatenated with FAX commands (prefix AT+F)
GSM 7.07 commands	Cannot be concatenated with extended commands (prefix AT^S)
GSM 7.05 commands (SMS)	To be used standalone
Commands starting with AT&	To be used standalone
AT+IPR	To be used standalone

1.5 Communication between Customer Application and TC65i

Leaving hardware flow control unconsidered the Customer Application (TE) is coupled with the TC65i (ME) via a receive and a transmit line.
Since both lines are driven by independent devices collisions may (and will) happen. For example, if the TE issues an AT command the TC65i starts sending a URC. This will probably cause the TE to misinterpret the URC being part of the AT command's response. To avoid this conflict the following measures must be taken:

- If an AT command is finished (with "OK" or "ERROR") the TE shall always wait at least 100 ms before sending the next one. This applies to bit rates of 9600 bps or higher (see AT+IPR). At bit rates below 9600 bps the delay must be longer: 300 ms at 1200 bps, and 500 ms at 300 bps.
  The pause between two AT commands gives the TC65i the opportunity to the transmission of pending URCs and get necessary service.
  Note that some AT commands may require more delay after "OK" or "ERROR" response, refer to the following command specifications for details.
- The TE shall communicate with the TC65i using activated echo (ATE1), i.e. the TC65i echoes characters received from the TE.
  Hence, when the TE receives the echo of the first character "A" of the AT command just sent by itself it has control both over the receive and the transmit paths.

Using Backspace at command line:

- As the standard GSM alphabet does not provide a backspace functionality the TC65i is designed to use the character "08" (hex 0x08) as backspace for command line input. This allows the user to easily erase the last character when writing an AT command. On the other hand, this solution requires entering the escape sequence \08 for writing the "ò" character in GSM character string parameters.

Software flow control:

- Regardless of the selected alphabet, keep in mind that, when software flow control is activated, decimal 17 and 19 are interpreted as XON/XOFF control characters.

1.6 Supported character sets

The ME supports two character sets: *GSM 03.38* (7 bit, also referred to as GSM alphabet or SMS alphabet) and *UCS2* (16 bit, refer to ISO/IEC 10646). See AT+CSCS for information about selecting the character set. Character tables can be found below.

Explanation of terms

- International Reference Alphabet (IRA)
  IRA means that one byte is displayed as two characters in hexadecimal format. For example, the byte 0x36 (decimal 54) is displayed as "36" (two characters). IRA is used here for input 8-bit or 16-bit data via terminal devices using text mode. This means only characters 'A'..'F','a'..'f' and '0'..'9' are valid.
- Escape sequences
  The escape sequence used within a text coded in the GSM default alphabet (0x1B) must be correctly interpreted by the TE, both for character input and output. To the module, an escape sequence appears like any other byte received or sent.
- Terminal Adapter (TA)
  TA is an equivalent term for Mobile Equipment (ME) which stands for the TC65i module.
- Terminal Equipment (TE)
  TE is the device connected to the TA via serial interface.
- TE Character Set
  The character set currently used by Terminal Equipment is selected with AT+CSCS.
- Data Coding Scheme (dcs)
  DCS is part of a short message and is saved on the SIM. When writing a short message to the SIM in text mode, the dcs stored with AT+CSMP is used and determines the coded character set.

When you enter characters that are not valid characters of the supported alphabets the behavior is undefined.
If the GSM alphabet is selected, all characters sent over the serial line (between TE and TA) must be in the range from 0 to 127 (7 bit range).
Note: If the ME (TA) is configured for GSM alphabet, but the application (TE) uses ASCII, bear in mind that some characters have different code values, such as the following:

- "@" character with GSM alphabet value 0 is not printable by an ASCII terminal program (e.g. Microsoft© Hyperterminal®).
- "@" character with GSM alphabet value 0 will terminate any C string! This is because value 0 is defined as C string end tag. Therefore, the GSM Null character may cause problems on application level when using a 'C'-function as "strlen()". Using an escape sequence as shown in the table below solves the problem. By the way, this may be the reason why even network providers often replace "@"with "@=*" in their SIM application.
- Some other characters of the GSM alphabet may be misinterpreted by an ASCII terminal program. For example, GSM "ö" (as in "Börse") is assumed to be "|" in ASCII, thus resulting in "B|rse". This is because in both alphabets there are different characters assigned to hex values 7C or 00.

When you write characters differently coded in ASCII and GSM (e.g. Ä, Ö, Ü), you need to enter escape sequences. The escape sequence will be translated into the corresponding GSM character value that can be correctly represented by any program using the GSM alphabet. However, trying to read the same string with an ASCII terminal delivers a wrong character.

Table 1.5: Examples for character definitions depending on alphabet

GSM 03.38 character	GSM character hex. value	Corresponding ASCII character	ASCII Esc sequence	Hex Esc sequence
Ö	5C	\	\5C	5C 35 43
"	22	"	\22	5C 32 32
@	00	NULL	\00	5C 30 30

Some terminal programs do not recognize escape sequences, and thus, handle escape sequences as normal characters. Ways of writing escape sequences depend on the used terminal program.
To prevent misinterpretation of control characters or special characters it is recommended to prefer the USC2 alphabet and/or PDU mode in any external application.

1.6.1 GSM alphabet tables and UCS2 character values

This section provides tables for the GSM 03.38 alphabet supported by the ME. Below any GSM character find the corresponding two byte character value of the UCS2 alphabet.
(For related mapping definition see: http://www.unicode.org/Public/MAPPINGS/ETSI/GSM0338.TXT)

Main character table of GSM 03.38 alphabet				b7	0	0	0	0	1	1	1	1
				b6	0	0	1	1	0	0	1	1
				b5	0	1	0	1	0	1	0	1
b4	b3	b2	b1		0	1	2	3	4	5	6	7
0	0	0	0	0	@ 0040	Δ 0394	SP 0020	0 0030	¡ 00A1	P 0050	¿ 00BF	p 0070
0	0	0	1	1	£ 00A3	_ 005F	! 0021	1 0031	A 0041	Q 0051	a 0061	q 0071
0	0	1	0	2	$ 0024	Φ 03A6	" 0022	2 0032	B 0042	R 0052	b 0062	r 0072
0	0	1	1	3	¥ 00A5	Γ 0393	# 0023	3 0033	C 0043	S 0053	c 0063	s 0073
0	1	0	0	4	è 00E8	Λ 039B	¤ 00A4	4 0034	D 0044	T 0054	d 0064	t 0074
0	1	0	1	5	é 00E9	Ω 03A9	% 0025	5 0035	E 0045	U 0055	e 0065	u 0075
0	1	1	0	6	ù 00F9	Π 03A0	& 0026	6 0036	F 0046	V 0056	f 0066	v 0076
0	1	1	1	7	ì 00EC	Ψ 03A8	' 0027	7 0037	G 0047	W 0057	g 0067	w 0077
1	0	0	0	8	ò 00F2 [3]	Σ 03A3	(0028	8 0038	H 0048	X 0058	h 0068	x 0078
1	0	0	1	9	Ç 00C7	Θ 0398	) 0029	9 0039	I 0049	Y 0059	i 0069	y 0079
1	0	1	0	10 /A	LF [LF] [2]	Ξ 039E	* 002A	: 003A	J 004A	Z 005A	j 006A	z 007A
1	0	1	1	11 /B	Ø 00D8	[1]	+ 002B	; 003B	K 004B	Ä 00C4	k 006B	ä 00E4
1	1	0	0	12 /C	ø 00F8	Æ 00C6	, 002C	< 003C	L 004C	Ö 00D6	l 006C	ö 00F6
1	1	0	1	13 /D	CR [CR] [2]	æ 00E6	- 002D	= 003D	M 004D	Ñ 00D1	m 006D	ñ 00F1
1	1	1	0	14 /E	Å 00C5	ß 00DF	. 002E	> 003E	N 004E	Ü 00DC	n 006E	ü 00FC
1	1	1	1	15 /F	å 00E5	É 00C9	/ 002F	? 003F	O 004F	§ 00A7	o 006F	à 00E0

Figure 1.1: Main character table of GSM 03.38 alphabet

1) This code is an escape to the following extension of the 7 bit default alphabet table.
2) This code is not a printable character and therefore not defined for the UCS2 alphabet. It shall be treated as the accompanying control character.
3) See Section 1.5, Communication between Customer Application and TC65i for further details on using backspace and "ò" character.

Extension character table of GSM 03.38 alphabet				b7	0	0	0	0	1	1	1	1
				b6	0	0	1	1	0	0	1	1
				b5	0	1	0	1	0	1	0	1
b4	b3	b2	b1		0	1	2	3	4	5	6	7
0	0	0	0	0					| 007C			
0	0	0	1	1								
0	0	1	0	2								
0	0	1	1	3								
0	1	0	0	4		^ 005E						
0	1	0	1	5							€ 20AC [2]	
0	1	1	0	6								
0	1	1	1	7								
1	0	0	0	8			{ 007B					
1	0	0	1	9			} 007D					
1	0	1	0	10 /A	[3] [LF]							
1	0	1	1	11 /B		[1]						
1	1	0	0	12 /C				[005B				
1	1	0	1	13 /D				~ 007E				
1	1	1	0	14 /E				] 005D				
1	1	1	1	15 /F			\ 005C					

Figure 1.2: Extension character table of GSM 03.38 alphabet

1) This code value is reserved for the extension to another extension table. On receipt of this code, a receiving entity shall display a space until another extension table is defined.
2) This code represents the EURO currency symbol. The code value is the one used for the character 'e'. Therefore a receiving entity which is incapable of displaying the EURO currency symbol will display the character 'e' instead.
3) This code is defined as a Page Break character and may be used for example in compressed CBS messages. Any mobile which does not understand the 7 bit default alphabet table extension mechanism will treat this character as Line Feed.

In the event that an MS receives a code where a symbol is not represented in Figure 1.2, Extension character table of GSM 03.38 alphabet the MS shall display the character shown in the main default 7 bit alphabet table (see Figure 1.1, Main character table of GSM 03.38 alphabet).

1.6.2 UCS2 and GSM data coding and conversion for SMS text mode and Remote SAT

This section provides basic information on how to handle input and output character conversion for SMS text mode and Remote SAT if internal (TA) and external (TE) character representation differ, i.e. if the Data Coding Scheme and the TE character use different coding.

1.6.2.1 Implementing output of SIM data to Terminal (direction TA to TE)

Used character set	DCS = 7 bit GSM	DCS = 8 bit Data	DCS = 16 bit UCS2
GSM	Case 1 GSM (1:1)	Case 2 8 bit to IRA (1:2)	Case 3 UCS2 to IRA (2:4)
UCS2	Case 4 GSM to IRA (1:4)	Case 5 8 bit to IRA (1:4)	Case 6 UCS2 to IRA (2:4)

Note: The ratio of SIM bytes to output bytes is given in parentheses.

Case 1
Every GSM character is sent to the TE as it is (8-bit value with highest bit set to zero).
Example: 47'H, 53'H, 4D'H → 47'H, 53'H, 4D'H, displayed as "GSM"

Case 2
Every data byte is sent to the TE as 2 IRA characters each representing a halfbyte.
Example: B8'H (184 decimal) → 42'H, 38'H, displayed as "B8"

Case 3
Every 16-bit UCS2 value is sent to the TE as 4 IRA characters.
Example: C4xA7'H (50343 decimal) → 43'H, 34'H, 41'H, 37'H, displayed as "C4A7"
Problem: An odd number of bytes leads to an error because there are always two bytes needed for each USC2 character

Case 4
Every GSM character is sent to the TE as 4 IRA characters to show UCS2 in text mode.
Example: 41'H ("A") → 30'H, 30'H, 34'H, 31'H, displayed as "0041"

Case 5
Every data byte is sent to the TE as IRA representation of UCS2 (similar to case 4).
Example: B2'H → 30'H, 30'H, 42'H, 32'H, displayed as "00B2"

Case 6
Every 16-bit value is sent to the TE as IRA representation of it. It is assumed that number of bytes is even.
Example: C3x46'H → 43'H, 33'H, 34'H, 36'H, displayed as "C346"

1.6.2.2 Implementing input of Terminal data to SIM (direction TE to TA)

Used character set	DCS = 7 bit GSM	DCS = 8 bit Data	DCS = 16 bit UCS2
GSM	Case 1 GSM (1:1)	Case 2 IRA to 8 bit (2:1)	Case 3 IRA to 16 bit (4:2)
UCS2	Case 4 UCS2 to GSM (4:1)	Case 5 UCS2 to 8 bit (4:1)	Case 6 UCS2 to 16 bit (4:2)

Note: The ratio between the number of input characters and bytes stored on the SIM is given in parentheses.

Case 1
Every character is sent from TE to TA as GSM character (or ASCII with standard terminal emulation, e.g. Hyperterminal).
Character value must be in range from 0 to 127 because of 7-bit GSM alphabet.
To reach maximum SMS text length of 160 characters in 140 bytes space characters will be compressed on SIM. This must be set using the parameter <dcs> of AT+CSMP (add 64).
Example: "ABCDEFGH" typed is sent and stored uncompressed as → 4142434445464748'H (stored compressed as 41E19058341E91'H)

Case 2
Every data byte is sent as 2 IRA characters.
Maximum text length is 280 IRA characters which will be converted into 140 bytes SMS binary user data
Example: "C8" typed is sent as 43'H, 38'H → stored as C8'H

Case 3
Every 16-bit value is sent as 4 IRA characters.
Maximum text length is 280 IRA characters which will be converted into 70 UCS2 characters (16-bit each)
Number of IRA characters must be a multiple of four because always 4 half bytes are needed for a 16-bit value
Example: "D2C8" typed is sent as 44'H, 32'H, 43'H, 38'H → stored as D2C8'H

Case 4
Every GSM character is sent as 4 IRA characters representing one UCS2 character.
Example: To store text "ABC" using UCS2 character set you have to type "004100420043".
This is sent as 30'H,30'H,34'H,31'H, 30'H,30'H,34'H,32'H, 30'H,30'H,34'H,33'H → detected as IRA representation of 3 UCS2 characters, converted to GSM character set and stored as 41'H, 42'H, 43'H.
Maximum input is 640 IRA characters repesenting 160 UCS2 characters when compression is active. These are converted to 160 GSM 7-bit characters.
Without compression only 140 GSM characters can be stored which are put in as 560 IRA characters.
Values of UCS2 characters must be smaller than 80'H (128 decimal) to be valid GSM characters.
Number of IRA characters must be a multiple of four. Problems:
- "41" → Error, there are four IRA characters (two bytes) needed
- "0000" → Error, not an UCS2 character
- "4142" → Error, value of UCS2 character > 7F'H
- "008B" → Error, value of UCS2 character > 7F'H
  This affects the maximum input length of a string)

Case 5
Every UCS2 character is sent as 4 IRA characters and is converted into two 8-bit values. This means that the first two characters have to be '00'.
Example: UCS2 character 009F'H typed as "009F" is sent as 30'H,30'H,39'H,46'H → converted into 8-bit value 9F'H.
Maximum number of UCS2 characters is 140 which are represented by 560 IRA characters. Number of IRA characters must be a multiple of four.

Case 6
Every UCS2 character is sent as 4 IRA characters each and is converted into a 16-bit value again.
Example: UCS2 character 9F3A'H typed as "9F3A" is sent as 39'H,46'H,33'H,41'H → converted into 9F3A'H.
Maximum number of UCS2 characters is 70 which are represented by 280 IRA characters. Number of IRA characters must be a multiple of four.
Invalid UCS2 values must be prevented.

1.7 Unsolicited Result Code Presentation

URC stands for Unsolicited Result Code and is a report message issued by the ME without being requested by the TE, i.e. a URC is issued automatically when a certain event occurs. Hence, a URC is not issued as part of the response related to an executed AT command.
Typical events leading to URCs are incoming calls ("RING"), waiting calls, received short messages, changes in temperature, network registration etc.
A list of all URCs can be found in Section 23.7, Summary of Unsolicited Result Codes (URC).

To announce a pending URC transmission the ME will do the following:

- The ME activates its RING line (logic "1") for 1 second, i.e. the RING line changes to the physical "Low" level. This allows the TE to stay in power saving mode until an ME related event requests service.
  If several URCs occur coincidently or in quick succession each URC triggers the RING line independently, although the line will not be deactivated between each URC. As a result, the RING line may stay low for more than 1 second.
  If an incoming call is answered within less than 1 second (with ATA or if autoanswering is set to ATS0=1) than the RING line will be deactivated earlier.
  The "^SHUTDOWN" URC will not activate the RING line.
- If the AT command interface is busy a "BREAK" will be sent immediately but the URC will not be issued until the line is free. This may happen if the URC is pending in the following cases:
  - During the processing of an AT command (i.e. the time after the TE echoes back the first character "A" of an AT command just sent by itself until the ME responds with "OK" or "ERROR").
  - During a data call.

  Please note that AT command settings may be necessary to enable in-band signaling, e.g. refer to AT+CMER or AT+CNMI.

It is strongly recommended to use the multiplex mode to map logical communication channels onto the serial line of the TC65i, for details refer to [6] and AT command AT+CMUX. Doing so it is possible to use one channel to still process URCs while having a data call active on another.
For most of these messages, the ME needs to be configured whether or not to send a URC. Depending on the AT command, the URC presentation mode can be saved to the user defined profile (see AT&W), or needs to be activated every time you reboot the ME. Several URCs are not user definable, such as "^SYSSTART", "^SYSSTART <text>", "^SHUTDOWN"
If autobauding is enabled (AT+IPR=0), URCs generated after restart will be output with 115200 bps until the ME has detected the current bit rate. The URCs "^SYSSTART", "^SYSSTART <text>", however, are not presented at all. For details please refer to Section 4.9.1, Autobauding. To avoid problems we recommend to configure a fixed bit rate rather than using autobauding.

1.8 Errors and Messages

The command result codes "+CME ERROR: <err>" and "+CMS ERROR: <err>" indicate errors related to mobile equipment or network functionality.

The format of <err> can be either numeric or verbose and is selectable via AT+CMEE.

A result error code terminates the execution of the command and prevents the execution of all remaining commands that may follow on the same command line. If so, neither "ERROR" nor "OK" result codes are returned for these commands. A 30 seconds timeout will deliver "ERROR" when the input of a command is not complete.

Using the wrong command syntax may result in errors: For example, using the execute command syntax although the command has no execute format, causes "ERROR" to be returned. Likewise, using the write command syntax although the command has no write format causes "+CME ERROR: <err>" to be returned.

See also:

- Section 2.12.1, CME/CMS Error Code Overview
- Section 2.5.1, Verbose and numeric result codes
- Section 3.4, AT+CEER

1.9 Auxiliary Serial Interface

The second serial interface (ASC1) is designed as an additional interface for applications which need multiple parallel access to the TC65i, e.g. to query status information while a data connection is in progress on ASC0. However, the auxiliary interface provides only limited functionality:

- Multiplex mode via AT+CMUX is not supported.
- DTR, DSR, DCD, RING hardware lines do not exist. AT commands for controlling the behavior of these lines (AT&D, AT&C, AT&S) can be used but will have no effect.
- CSD calls are not supported.
- Fax calls are not supported.
- When you set up packet switched connections take care that your application uses only AT commands, parameters and signal lines supported on the ASC1 interface. For example, keep in mind that Microsoft Dial-up connections are typically trying to request the DCD line status and that common modem drivers use to send commands such as AT+CBST or ATS7, which may not be supported.
- No Autobauding. The hardware is not capable of automatically detecting the baudrate on this interface, so the AT command which selects autobauding (AT+IPR=0) is not allowed and returns ERROR.

ASC1 is disabled when the multiplexer is enabled on the first serial interface ASC0. Yet, both ASC1 and the multiplexer channel 2 are using the same parameters, and thus, the same user defined profile (if any). As a result, a user profile stored on multiplexer channel 2 takes effect on ASC1 after closing the multiplexer and starting up ASC1. Likewise, a user profile stored on ASC1 will be loaded on multiplexer channel 2.
This may be a problem when ASC1 is not connected, but flow control (for example AT\Q1 or AT\Q3) is stored to the user profile on the multiplexer channel 2. In this case, flow control takes effect on ASC1, when the multiplexer is switched off. If then for example a large amount of URCs is generated, their transmission might be stopped due to the flow control. To avoid this problem we recommend that you do not activate flow control on multiplexer channel 2 when you set up a user profile with AT&W.

1.10 Serial Interface Flow Control

Flow control is essential to prevent loss of data or avoid errors when, in a data or fax call, the sending device is transferring data faster than the receiving side is ready to accept. When the receiving buffer reaches its capacity, the receiving device should be capable to cause the sending device to pause until it catches up.
There are basically two approaches to regulate data flow: Software flow control and hardware flow control. The High Watermark (HWM) of the input/output buffer should be set to approximately 60% of the total buffer size, the Low Watermark (LWM) is recommended to be about 30%. The data flow should be stopped when the buffer capacity rises close to the High Watermark and resumed when it drops below the Low Watermark. The time required to cause stop and go results in a hysteresis between the High and Low Watermarks.

1.10.1 Software Flow Control (XON/OFF Handshake)

Software flow control can be used to control the data flow in both directions from DTE to TC65i and from TC65i to DTE. Software flow control uses different characters to stop (XOFF, decimal 19) and resume (XON, decimal 17) data flow. Hence, all data that represent XON or XOFF characters will be interpreted as control characters. This applies also to characters included within the data stream to be transmitted (usually plain ASCII text files do not inlude such characters). The only advantage of software flow control is that three wires would be sufficient on the serial interface.

1.10.2 Hardware Flow Control (RTS/CTS Handshake)

Hardware flow control sets or resets the RTS/CTS wires. This approach is faster and more reliable, and therefore, the better choice. When the HWM is reached, CTS is set inactive. When the LWM is passed, CTS goes active again. To achieve smooth data flow, ensure that the RTS/CTS lines are present on your application platform.

Configuring hardware flow control

- Hardware flow control must be set on both sides: with AT\Q3 or AT+IFC in the ME and an equivalent RTS/CTS handshake option in the host application.
- The default setting of the ME is AT\Q0 (no flow control) which must be altered to AT\Q3 (RTS/CTS hardware handshake on). The setting is stored volatile and must be restored each time after rebooting the ME.
- AT\Q has no read command. To verify the current setting of AT\Q, simply check the settings of the active profile with AT&V.
- Often, fax programs run an intialization procedure when started up. The intialization commonly includes enabling RTS/CTS hardware handshake, eliminating the need to set AT\Q3 once again. However, before setting up a CSD call, you are advised to check that RTS/CTS handshake is set.

Buffer design considerations

- Each serial interface (ASC0 and ASC1) of the TC65i uses two buffers, one for the uplink and one for the downlink. Each buffer has a capacity of minimum 1024 bytes.
- Uplink direction (where ME is receiving data from host application):
  CTS control is based on the filling level of the ME's receive buffer. When the application detects that CTS is being deactivated it must instantly stop sending data to the ME's receive buffer. But still, after deactivation of CTS, the receive buffer of the ME can accept another 512 bytes.
- Downlink direction (where ME is sending data to host application):
  The transmit buffer of the ME can hold at least 1024 bytes. After deactivation of RTS the ME sends max. 2 more bytes and then stops transferring data to the application.
  The maximum time RTS can be kept inactive without losing data is determined by the buffer size and the maximum possible over-the-air data rate. In any case, the local data rate between DCE and DTE (AT+IPR) should be set to a value higher than the maximum possible over-the-air data rate.
- Buffer size recommended for the host application:
  Just like the ME, the host application should include send and receive buffers for each serial interface. To

handle large amounts of data at high speed a buffer capacity of 1024 bytes is recommended. If the host application is designed mainly for one direction (uplink or downlink) a lower buffer size will do for the direction where less data is transferred.
In fact, the optimal size of the host application buffers is a matter of finding the balance between the amount of data, data throughput, reaction time of the application when handling the buffer, processor performance and available memory. To give an example, a small buffer size (such as 256 bytes) increases the frequency of deactivating RTS/CTS and the frequency of flushing the buffer, thus diminishing the efficiency of the application.
Also, please consider that RTS/CTS flow control cannot stop the data stream coming from the network, e.g. in a GPRS or fax connection. So the lack of appropriate hardware flow control increases the risk of losing data packets if, like in the case of UDP, the connection protocol has no or only minimum error handling functions. Other network protocols are using high level flow control mechanisms. For example, to prevent loss of data the TCP protocol uses retransmission algorithms, fax applications usually repeat the transfer of faulty pages.

1.11 Common PCN Handset Specification (CPHS)

The ME provides features to implement a device following the prerequisites of the Common PCN Handset Specification (CPHS) Phase 2.

CPHS Feature	Description/Remarks	AT command
Alternate Line Service	Using two phone numbers with one SIM card.	AT^SALS
Voice Message Waiting Indication	Indicate the receipt of a short message coded as Voice Message Waiting Indicator as defined by the CPHS Phase 2 standard.	AT^SIND, AT+CMER, indicators "vmwait1" and "vmwait2"
Operator (Service provider) name from SIM	Read specific Elementary Files (6F14h, 6F18h) from SIM.	AT+CRSM
Network and Service Provider Lock	Lock/Unlock an ME to specific HPLMN and service provider.	AT+CLCK, (AT+CPIN)
Call Forwarding	Get and set diverted call status. Access specific Elementary File (6F13h) from SIM.	AT+CCFC, AT+CRSM
Customer Service Profile (CSP)	Setting services and their menu entries depending on customer profiles.	AT+CRSM
Information numbers	Hierarchically structured service numbers phonebook on SIM according to CPHS 4.2 (mandatory).	AT+CRSM

2. Configuration Commands

The AT Commands described in this chapter allow the external application to determine the TC65i's behaviour under various conditions.

2.1 AT&F Set all current parameters to manufacturer defaults

AT&F sets all current parameters to the manufacturer defined profile. All defined GPRS contexts which are not activated or not online will be undefined if the non volatile storage of CGDCONT settings is not activated by the AT^SCFG parameter "GPRS/PersistentContexts" (see AT+CGDCONT).

Syntax

Exec Command
AT&F[<value>]
Response(s)
OK

PIN	ASC0	ASC1	USB	MUX1	MUX2	MUX3	Charge	✈	Last
-	+	+	+	+	+	+	-	+	-

Reference(s)
V.250

Parameter Description

<value>(num)

[0]	Set all TA parameters to manufacturer defaults

Notes

- List of parameters reset to manufacturer default can be found in Section 23.6, Factory Default Settings Restorable with AT&F.
- In addition to the default profile, you can store an individual one with AT&W. To alternate between the two profiles enter either ATZ (loads user profile) or AT&F (restores factory profile).
- Every ongoing or incoming call will be terminated.

2.2 AT&V Display current configuration

AT&V returns the current parameter setting. The configuration varies depending on whether or not PIN authentication has been done and whether or not Multiplex mode is enabled (see AT+CMUX).

Syntax

Exec Command

AT&V[<value>]

Response(s)

ACTIVE PROFILE:
... (see Section 2.2.1, AT&V responses)
OK

PIN	ASC0	ASC1	USB	MUX1	MUX2	MUX3	Charge	✈	Last
-	+	±	+	+	±	±	-	+	-

Reference(s)

V.250

Parameter Description

<value>(num)

[0] Profile number

Notes

- The value of \Q (flow control) is also determined by the AT+IFC command. In case the value set by AT+IFC cannot be represented by a \Q equivalent, \Q255 will be displayed.
- The parameters of AT^SMGO can only be displayed after the SMS data from the SIM have been read successfully for the first time. Reading starts after successful SIM authentication has been performed, and may take up to 30 seconds depending on the SIM used. While the read process is in progress, an attempt to read the parameter will result in empty values.
- The parameter of AT+CSDH will only be displayed in SMS PDU mode, see AT+CMGF.

2.2.1 AT&V responses

The following tables show four different kinds of responses depending on whether or not the PIN is entered and whether or not the Multiplex mode is enabled (see AT+CMUX).

Table 2.1: Current configuration on ASC0 / MUX channel 1 / USB (example)

PIN authentication done	No PIN authentication
ACTIVE PROFILE: E1 Q0 V1 X4 &C1 &D2 &S0 \Q0 \V1 S0:000 S3:013 S4:010 S5:008 S6:000 S7:060 S8:000 S10:002 S18:000 +CBST: 7,0,1 +CRLP: 61,61,78,6 +CR: 0 +FCLASS: 0 +CRC: 0 +CMGF: 1 +CSDH: 0 +CNMI: 0,0,0,0,1 +ICF: 3 +IFC: 0,0 +ILRR: 0 +IPR: 115200 +CMEE: 2 ^SMGO: 0,0 +CSMS: 0,1,1,1 ^SACM: 0,"000000","000000" ^SLCC: 0 ^SCKS: 0,1 ^SSET: 0 +CREG: 0,1 +CLIP: 0,2 +CAOC: 0 +COPS: 0,0,"operator" +CGSMS: 3 OK	ACTIVE PROFILE: E1 Q0 V1 X4 &C1 &D2 &S0 \Q0 \V1 S0:000 S3:013 S4:010 S5:008 S6:000 S7:060 S8:000 S10:002 S18:000 +CBST: 7,0,1 +CRLP: 61,61,78,6 +CR: 0 +FCLASS: 0 +ICF: 3 +IFC: 0,0 +ILRR: 0 +IPR: 115200 +CMEE: 2 ^SCKS: 0,1 ^SSET: 0 OK

Table 2.2: Current configuration on ASC1 and MUX channels 2 and 3 (example)

PIN authentication done	No PIN authentication
ACTIVE PROFILE: E1 Q0 V1 X4 &C1 &D0 &S0 \Q0 \V1 S0:000 S3:013 S4:010 S5:008 +CR: 0 +CRC: 0 +CMGF: 1 +CSDH: 0 +CNMI: 0,0,0,0,1 +ICF: 3 +IFC: 0,0 +ILRR: 0 +IPR: 115200 +CMEE: 2 ^SMGO: 0,0 +CSMS: 0,1,1,1 ^SACM: 0,"000000","000000" ^SLCC: 0 ^SCKS: 0,1 ^SSET: 0 +CREG: 0,1 +CLIP: 0,2 +CAOC: 0 +COPS: 0,0,"operator" +CGSMS: 3 OK	ACTIVE PROFILE: E1 Q0 V1 X4 &C1 &D0 &S0 \Q0 \V1 S0:000 S3:013 S4:010 S5:008 +CR: 0 +ICF: 3 +IFC: 0,0 +ILRR: 0 +IPR: 115200 +CMEE: 2 ^SCKS: 0,1 ^SSET: 0 +CGSMS: 3 OK

2.3 AT&W Stores current configuration to user defined profile

AT&W stores the currently set parameters to a user defined profile in the non-volatile memory.

Syntax

Exec Command

AT&W[<value>]

Response(s)

OK
ERROR
+CME ERROR: <err>

PIN	ASC0	ASC1	USB	MUX1	MUX2	MUX3	Charge	✈	Last
-	+	+	+	+	+	+	-	+	-

Reference(s)

V.250

Parameter Description

<value>(num)

[0] Number of profile

Notes

- The user defined profile will be restored automatically after power-up. Use ATZ to restore user profile and AT&F to restore factory settings. Until the first use of AT&W, ATZ works as AT&F.
- AT&W stores all global settings and the current local settings of the interface, on which the command is executed.
- A list of parameters stored to the user profile can be found in Section 23.5, AT Command Settings storable with AT&W.

2.4 ATQ Result code presentation mode

This command determines whether or not the TA transmits any result code to the TE. Other information text transmitted as response is not affected.

Syntax

Exec Command
ATQ[<n>]
Response(s)
If <n>=0: OK If <n>=1: (none)

PIN	ASC0	ASC1	USB	MUX1	MUX2	MUX3	Charge	✈	Last
-	+	+	+	+	+	+	-	+	-

Reference(s)
V.250

Parameter Description

<n>(num)(&W)(&V)	
[0](&F)	DCE transmits result code
1	Result codes are suppressed and not transmitted

2.5 ATV Result code format mode

This command determines the contents of header and trailer transmitted with AT command result codes and information responses. Possible responses are described in Section 2.5.1, Verbose and numeric result codes.

Syntax

Exec Command

`ATV[<value>]`

Response(s)

`OK`
`ERROR`

PIN	ASC0	ASC1	USB	MUX1	MUX2	MUX3	Charge	✈	Last
-	+	+	+	+	+	+	-	+	-

Reference(s)

V.250

Parameter Description

`<value>`(num)(&W)(&V)

[0]	Information response: <text><CR><LF> Short result code format: <numeric code><CR>
1(&F)	Information response: <CR><LF><text><CR><LF> Long result code format: <CR><LF><verbose code><CR>

2.5.1 Verbose and numeric result codes

Verbose format	Numeric format	Meaning
OK	0	command executed, no errors
CONNECT	1	link established
RING	2	ring detected
NO CARRIER	3	link not established or disconnected
ERROR	4	invalid command or command line too long
NO DIALTONE	6	no dial tone, dialling impossible, wrong mode
BUSY	7	remote station busy
CONNECT 2400/RLP	47	link with 2400 bps and Radio Link Protocol
CONNECT 4800/RLP	48	link with 4800 bps and Radio Link Protocol
CONNECT 9600/RLP	49	link with 9600 bps and Radio Link Protocol
CONNECT 14400/RLP	50	link with 14400 bps and Radio Link Protocol
ALERTING		alerting at called phone
DIALING		mobile phone is dialing

2.6 ATX Set CONNECT result code format and call monitoring

ATX determines whether or not the TA detects the presence of dial tone and busy signal and whether or not TA transmits particular result codes.

Syntax

Exec Command
ATX[<value>]
Response(s)
OK ERROR

PIN	ASC0	ASC1	USB	MUX1	MUX2	MUX3	Charge	✈	Last
-	+	+	+	+	+	+	-	+	-

Reference(s)
V.250

Parameter Description

<value>(num)(&W)(&V)	
[0]	CONNECT result code only returned, dial tone and busy detection are both disabled.
1	CONNECT <text> result code only returned, dial tone and busy detection are both disabled.
2	CONNECT <text> result code returned, dial tone detection is enabled, busy detection is disabled.
3	CONNECT <text> result code returned, dial tone detection is disabled, busy detection is enabled.
4(&F)	CONNECT <text> result code returned, dial tone and busy detection are both enabled.

2.7 AT\V Set CONNECT result code format

Syntax

Exec Command
AT\V[<value>]
Response(s)
OK ERROR

PIN	ASC0	ASC1	USB	MUX1	MUX2	MUX3	Charge	✈	Last
-	+	-	+	+	-	-	-	+	-

Reference(s)
V.250

Parameter Description

<value>(num)(&W)(&V)	
[0]	CONNECT <text> result code returned without RLP trailer
1(&F)	CONNECT <text> result code returned with RLP trailer

Notes

- For circuit switched data calls only.
- Output only if ATX parameter is set with value > 0.

2.8 ATZ Set all current parameters to user defined profile

ATZ sets all current parameters to the user profile stored with AT&W. If a connection is in progress, it will be terminated.
All defined GPRS contexts which are not activated or not online will be undefined if the non volatile storage of CGDCONT settings is not activated by the AT^SCFG parameter "GPRS/PersistentContexts" (see AT+CGDCONT).
The user defined profile is stored to the non-volatile memory.

Syntax

Exec Command
ATZ[<value>]
Response(s)
OK

PIN	ASC0	ASC1	USB	MUX1	MUX2	MUX3	Charge	✈	Last
-	+	+	+	+	+	+	-	+	-

Reference(s)
V.250

Parameter Description

<value>(num)

[0]	Reset to user profile

Notes

- First the profile will be set to factory default (see AT&F). If there is a valid user profile (stored with AT&W), this profile will be loaded afterwards.
- Any additional commands on the same command line may be ignored. A delay of 300 ms is required before next command is sent, otherwise "OK" response may be corrupted.

2.9 AT+CFUN Set phone functionality

The AT+CFUN command serves to control the functionality level of the ME. It can be used to reset the ME, to choose one of the SLEEP modes or to return to full functionality.
Intended for power saving, SLEEP mode reduces the functionality of the ME to a minimum and thus minimizes the current consumption. Further information, particularly power supply ratings during the various operating modes and the timing of hardware signals in SLEEP mode can be found in the "TC65i Hardware Interface Description, Version 01.100".
SLEEP mode falls in two categories:

- NON-CYCLIC SLEEP mode <fun>=0
- and CYCLIC SLEEP modes, selectable as <fun>= 7 or 9.

NON-CYCLIC SLEEP mode permanently blocks the serial interface. The benefit of the CYCLIC SLEEP mode is that the serial interface remains accessible and that, in intermittent wake-up periods, characters can be sent or received without terminating the selected mode. This allows the ME to wake up for the duration of an event and, afterwards, to resume power saving. Please refer to Section 2.9.1, Wake up the ME from SLEEP mode for a summary of all SLEEP modes and the different ways of waking up the module.
For CYCLIC SLEEP mode both the ME and the application must be configured to use hardware flow control. This is necessary since the CTS signal is set/reset every 0.9-2.7 seconds in order to indicate to the application when the UART is active. The default setting of hardware flow control is AT\Q0 which must be altered to AT\Q3. For use after restart you are advised to add it to the user profile saved with AT&W.
If both interfaces ASC0 and ASC1 are connected, hardware flow control must be set in either application. See notes below for further detail.
SLEEP mode management if Java is started: The Java Virtual Machine remains active, but also enters the SLEEP mode. AT commands can be sent from the Java application to the serial interface, no matter which SLEEP mode was selected. This allows you to control the ME even if it is in NON-CYCLIC SLEEP mode.

The AT+CFUN test command returns the values of the supported parameters.
The AT+CFUN read command returns the current functionality value.
The AT+CFUN write command can be used to reset the ME, to choose one of the SLEEP modes or to return to full functionality.

Syntax

Test Command

```
AT+CFUN=?
```

Response(s)

```
+CFUN: (list of supported <fun>s) , (list of supported <rst>s)
OK
```

Read Command

```
AT+CFUN?
```

Response(s)

```
+CFUN: <fun>
OK
```

Write Command

```
AT+CFUN=[<fun>[, <rst>]]
```

Response(s)

```
OK
ERROR
+CME ERROR: <err>
```

PIN	ASC0	ASC1	USB	MUX1	MUX2	MUX3	Charge	✈	Last
-	+	+	+	±	±	±	-	+	-

Reference(s)

GSM 07.07

Unsolicited Result Codes

URC 1

^SYSSTART

Indicates that the ME has been started and is ready to operate. If autobauding is active (AT+IPR=0) the URC is not generated.

If the ME is configured to enter the Airplane mode after restart or reset the following URC is received on boot-up: "^SYSSTART AIRPLANE MODE". In this mode, only the AT commands listed in Section 23.4, Availability of AT Commands Depending on Operating Mode of ME can be used. For details please refer to the AT^SCFG command, parameter <mapos>.

URC 2

^SYSSTART CHARGE ONLY MODE

Indicates that the ME has entered the CHARGE ONLY mode. This occurs if the charger is connected while the ME is in POWER DOWN mode. If autobauding is active (AT+IPR=0) the URC is not generated. In CHARGE ONLY mode the ME is neither registered to the GSM network nor are the serial interfaces fully accessible. Only the AT commands listed in Section 23.4, Availability of AT Commands Depending on Operating Mode of ME can be used. For further details on charging refer to the Hardware Interface Description [2].

Parameter Description

<fun>(num)	
0	NON-CYCLIC SLEEP mode: In this mode, the AT interface is not accessible. Consequently, after setting <fun>=0, do not send further characters. Otherwise these characters remain in the input buffer and may delay the output of an unsolicited result code. The first wake-up event stops power saving and takes the ME back to full functionality level <fun>=1.
[1](&F)(P)	Full functionality (no power saving). If the ME is in one of the CYCLIC SLEEP modes you can issue AT+CFUN=1 to stop power saving and return to full functionality. If the ME is NON-CYCLIC SLEEP mode, <fun>=1 can also be sent by the Java application. Keep in mind that, unlike the reset command described below, this action does not restart the ME but only changes the level of functionality. See parameter <rst> for details on the reset.
7	CYCLIC SLEEP mode: In this mode, the serial interface is shortly enabled while CTS is active. If characters are recognized on the serial interface, the ME stays active for 2 seconds after the last character was sent or received. The ME exits SLEEP mode only, if AT+CFUN=1 is entered.
9	CYCLIC SLEEP mode: In this mode, the serial interface is shortly enabled while CTS is active. If characters are recognized on the serial interface, the ME stays active after the last character was sent or received for at least the time, which can be configured by AT^SCFG="PowerSaver/Mode9/Timeout",<psm9to> (temporary wakeup). In contrast to SLEEP mode 7 assertion of RTS can also be used to temporarily wake up the ME. In this case too, activity time is at least the time set with AT^SCFG="PowerSaver/Mode9/Timeout",<psm9to>. RTS can be activated either from ASC0 or ASC1. The ME exits SLEEP mode only, if AT+CFUN=1 is entered.

<rst>(num)	

The parameter can only be used if the serial interface is enabled.
Due to the command syntax, you need to enter parameter <fun>, followed by <rst>, where <fun> is only a placeholder and has no effect. See examples below.

[0]	Placeholder for <fun> as stated above.
1	ME resets and restarts to full functionality. After reset and restart, PIN 1 authentication is necessary (AT+CPIN). If autobauding is enabled, it is recommended to wait 3 to 5 seconds before entering the first AT command. For details on autobauding refer to Section 4.9.1, Autobauding.

Notes

- The settings made with AT+CFUN apply to both serial interfaces ASC0 and ASC1.
- CYCLIC SLEEP mode cannot be activated or resumed as long as data are buffered in one of the output buffers of the ME (ASC0 or ASC1). This should be taken into account, because RTS may be unintentionally asserted if, for example, one of the following scenarios occurs:
  a) Hardware flow control is set in the ME (AT\Q3), but not in the host application (RTS/CTS handshake).
  b) The two serial interfaces ASC0 and ASC1 are connected, but one of them is released, e.g. after closing or deactivating the application connected to this interface.
  In cases a) and b) data sent by the ME, such as URCs or outstanding AT command responses, will be buffered in the output buffer of this interface, signalized by the active RTS line until the buffer is emptied.
  Therefore, for CYCLIC SLEEP mode to work properly take care that the following requirements be met: Be sure that data sent by the ME are collected on both interfaces. Activate hardware flow control on ME (TA) and application side (TE). Avoid releasing one of the interfaces if any URCs are likely to occur on this interface.
- CYCLIC SLEEP mode cannot be activated or resumed as long as data is buffered in one of the output buffers of the ME (ASC0 or ASC1). Therefore, ensure that the following requirements be met:
  a) If hardware flow control is set in the ME (AT\Q3), the host must also use hardware flow control.
  b) Remember that AT\Q3 takes effect only on the interface where the command was set. Therefore, if both interfaces ASC0 and ASC1 are connected ensure to set AT\Q3 on each interface. However, if only one interface shall be operated ensure that, on the unused interface, AT\Q3 is neither enabled and nor stored to the AT&W user profile. This is necessary to avoid that URCs, outstanding AT command responses or, after restart even the "^SYSSTART" URC might be buffered on the unused interface without being collected by the host application.
- In Multiplex mode, the CFUN profile is shared by all multiplexer channels.
- If the ME is in Multiplexer mode, it is not recommended to activate SLEEP mode with AT+CFUN=<fun>. The best approach to properly control SLEEP mode in this case is to issue the PSC messages described in [6], Section "Power saving control".
- If the host application uses the USB interface, power saving must be configured both on the TC65i module and on the USB host, i.e. the USB host must be set to Suspend mode (usually Selective or Global Suspend). Otherwise, if you change only the AT+CFUN parameters, the selected <fun> level will be accepted but the active USB keeps the module alive and thus prevents power saving until the USB plug is disconnected. Vice versa, if the module is in SLEEP mode restarting the USB will cause the module to stop power saving although the selected CFUN level does not change.
- When a circuit-switched call is in progress, <fun>=7 or 9 can be activated without terminating the call. However, setting <fun>=0 during a circuit-switched call immediately disconnects this call.
- To check whether power saving is on, you can query the status with the read command AT+CFUN? only if the module is in full functionality mode or in CYCLIC SLEEP mode. If available, you can also take advantage of the status LED controlled by the SYNC pin (see AT^SSYNC and [2]). With AT^SSYNC you can select different modes of LED signalization during SLEEP modes (see Section 19.6.1, ME status indicated by status LED patterns for details). However, the module can wake up temporarily from power saving without leaving its CYCLIC SLEEP mode (without changing +CFUN "<fun>"), e.g. for a network scan after a loss of radio coverage, or after receipt of serial data during CYCLIC SLEEP mode. During this "temporary wakeup state" the LED will operate as if the ME was in full functionality mode.
- Recommendation: In NON-CYCLIC SLEEP mode, you can set an RTC alarm to wake up the ME and return to full functionality. This is a useful approach because, in this mode, the AT interface is not accessible.

2.9.1 Wake up the ME from SLEEP mode

A wake-up event is any event that causes the ME to draw more current. Depending on the selected mode, the wake-up event either switches the SLEEP mode off and takes the ME back to full functionality AT+CFUN=1, or activates the ME temporarily without terminating the selected SLEEP mode.

Definitions of the state transitions described in Table 2.3:

- Quit: ME exits SLEEP mode.
- Temporary: ME becomes active temporarily for the duration of the event and the mode-specific follow-up time after the last character was sent or received on the serial interface.
- No effect: Event is not relevant in the selected SLEEP mode. The ME does not wake up.

Table 2.3: Wake-up events in NON-CYCLIC and CYCLIC SLEEP modes

Event	Selected mode: <fun>=0	Selected mode: <fun>=7 or 9
Ignition line	No effect	No effect
RTS0 or RTS1 activation	Quit	Mode 7: No effect (RTS is only used for flow control) Mode 9: Temporary
Unsolicited Result Code (URC)	Quit	Temporary
Incoming voice or data call	Quit	Temporary
Any AT command (incl. outgoing SMS, voice or data call)	Not possible (UART disabled)	Temporary
Incoming SMS (AT+CNMI is set to 0,0 (this is the default setting)	No effect	No effect
Incoming SMS (AT+CNMI is set to 1,1)	Quit	Temporary
GPRS data transfer	Not possible (UART disabled)	Temporary
RTC alarm (AT+CALA)	Quit	Temporary
AT+CFUN=1	Not possible (UART disabled)	Quit

In case of Java, the following events will cause the ME to quit NON-CYCLIC SLEEP mode <fun>=0:
- Toggling the RTS line
- Sending data on the serial interface
- Voice or data call (incoming and outgoing)
- AT+CFUN=1
- Terminating Java

2.10 AT^SMSO Switch off mobile station

AT^SMSO initiates the power-off procedure. High level of the module's PWR_IND pin and the URC "^SHUTDOWN" notify that the procedure has completed and the module has entered the POWER DOWN mode. Therefore, be sure not to disconnect the operating voltage until PWR_IND is high or until the URC "^SHUTDOWN" is displayed. Otherwise, you run the risk of losing data. For further details on how to turn off the module see the [2].

Syntax

Test Command
AT^SMSO=?
Response(s)
OK

Exec Command
AT^SMSO
Response(s)
^SMSO: MS OFF OK ERROR

PIN	ASC0	ASC1	USB	MUX1	MUX2	MUX3	Charge	✈	Last
-	+	+	+	+	+	+	-	+	+

Unsolicited Result Code

^SHUTDOWN

Indicates that the power-off procedure is finished and the module will be switched off in less than 1 second.

Notes

- Do not send any other AT command after AT^SMSO.
- If AT^SMSO is entered on one of the Multiplexer channels the ME closes the Multiplexer channels, terminates the Multiplexer and deactivates all other functions. Then, the URC "^SHUTDOWN" will be issued on the physical serial interface (ASC0). The URC will be transmitted at the bit rate last activated on ASC0 for use with the Multiplex driver.
- If both interfaces ASC0 and ASC1 are connected the URC appears on both of them.
- If the module is in NORMAL mode and the charger is connected to the VCHARGE line, the AT^SMSO command causes the module to shut down shortly and then start into the CHARGE ONLY mode. If the module is in CHARGE ONLY mode the AT^SMSO command is not supported at all. In both cases, the module can only be switched off by disconnecting the charger. See also [2].

2.11 AT+GCAP Request complete TA capabilities list

AT+GCAP returns a list of additional capabilities.

Syntax

Test Command
AT+GCAP=?
Response(s)
OK

Exec Command
AT+GCAP
Response(s)
+GCAP: <name> OK

PIN	ASC0	ASC1	USB	MUX1	MUX2	MUX3	Charge	✈	Last
-	+	+	+	+	+	+	-	+	-

Reference(s)
V.250

Parameter Description

<name>(str)

e.g.: +CGSM,+FCLASS

Note

- +CGSM: The response text shows which GSM commands of the ETSI standard are supported.

2.12 AT+CMEE Mobile Equipment Error Message Format

AT+CMEE controls the format of the error result codes that indicates errors related to TC65i functionality. Format can be selected between plain "ERROR" output, error numbers or verbose "+CME ERROR: <err>" and "+CMS ERROR: <err>" messages.
Possible error result codes are listed in Table 2.4, General "CME ERROR" Codes (GSM 07.07)Table 2.5, General "CME ERROR" Codes (proprietary)Table 2.6, GPRS related "CME ERROR" Codes (GSM 07.07)Table 2.9, Java related "CME ERROR" Codes (proprietary) and Table 2.8, SMS related "CMS ERROR" Codes (GSM 07.05).
In multiplex mode (refer AT+CMUX) the setting applies only to the logical channel where selected. The setting on the other channels may differ.

Syntax

Test Command
AT+CMEE=?
Response(s)
+CMEE: (list of supported<errMode>s) OK

Read Command
AT+CMEE?
Response(s)
+CMEE: <errMode> OK

Write Command
AT+CMEE=<errMode>
Response(s)
OK ERROR +CME ERROR: <err>

PIN	ASC0	ASC1	USB	MUX1	MUX2	MUX3	Charge	✈	Last
-	+	+	+	+	+	+	-	+	-

Reference(s)
GSM 07.07

Parameter Description

<errMode>(num)(&W)(&V)	
0(&F)(D)	Disable result code, i.e. only "ERROR" will be displayed.
1	Enable error result code with numeric values.
2	Enable error result code with verbose (string) values.

Example

To obtain enhanced error messages it is recommended to choose <errMode>=2.

```
AT+CMEE=2
OK
```

2.12.1 CME/CMS Error Code Overview

Table 2.4: General "CME ERROR" Codes (GSM 07.07)

<err> Code	Text (if AT+CMEE=2)
0	phone failure
1	no connection to phone
2	phone adapter link reserved
3	operation not allowed
4	operation not supported
5	PH-SIM PIN required
6	PH-FSIM PIN required
7	PH-FSIM PUK required
10	SIM not inserted
11	SIM PIN required
12	SIM PUK required
13	SIM failure
14	SIM busy
15	SIM wrong
16	incorrect password
17	SIM PIN2 required
18	SIM PUK2 required
20	memory full
21	invalid index
22	not found
23	memory failure
24	text string too long
25	invalid characters in text string
26	dial string too long
27	invalid characters in dial string
30	no network service
31	network timeout
32	network not allowed - emergency calls only
40	network personalization PIN required
41	network personalization PUK required
42	network subset personalization PIN required
43	network subset personalization PUK required
44	service provider personalization PIN required
45	service provider personalization PUK required
46	corporate personalization PIN required
47	corporate personalization PUK required
48	PH-SIM PUK (master phone code) required
100	unknown
132	service option not supported

<err> Code	Text (if AT+CMEE=2)
133	requested service option not subscribed
134	service option temporary out of order
256	operation temporary not allowed
257	call barred
258	phone busy
259	user abort
260	invalid dial string
261	SS not executed
262	SIM blocked
263	invalid block

Table 2.5: General "CME ERROR" Codes (proprietary)

<err> Code	Text (if AT+CMEE=2)
673	audio manager not ready
674	audio format cannot be configured
705	SIM toolkit menu has not been configured
706	SIM toolkit already in use
707	SIM toolkit not enabled
737	+CSCS type not supported
738	+CSCS type not found
741	must include <format> with <oper>
742	incorrect <oper> format
743	<oper> length too long
744	SIM full
745	unable to change PLMN list
746	network operator not recognised
749	invalid command length
750	invalid input string
753	missing required cmd parameter
754	invalid SIM command
755	invalid file Id
756	missing required P1/2/3 parameter
757	invalid P1/2/3 parameter
758	missing required command data
759	invalid characters in command data
761	CTM call is not setup
764	missing input value
765	invalid input value
766	unsupported value or mode
767	operation failed
768	multiplexer already active
769	unable to get control of required module

<err> Code	Text (if AT+CMEE=2)
770	SIM invalid - network reject
771	call setup in progress
772	SIM powered down
773	SIM file not present

Table 2.6: GPRS related "CME ERROR" Codes (GSM 07.07)

<err> Code	Text (if AT+CMEE=2)
103	illegal MS
106	illegal ME
107	GPRS services not allowed
111	PLMN not allowed
112	location area not allowed
113	roaming not allowed in this location area
148	unspecified GPRS error
149	PDP authentication failure
150	invalid mobile class

Table 2.7: GPRS related "CME ERROR" Codes (proprietary)

<err> Code	Text (if AT+CMEE=2)
577	GPRS - activation rejected by GGSN
578	GPRS - unspecified activation rejection
579	GPRS - bad code or protocol rejection
580	GPRS - can't modify address
581	GPRS - no echo replyGPRS - CHAP close
582	GPRS - profile (CID) currently unavailable
583	GPRS - a profile (CID) is currently active
584	GPRS - combined services not allowed
585	GPRS - conditional IE error
586	GPRS - context activation rejected
587	GPRS - duplicate TI received
588	GPRS - feature not supported
589	GPRS - service not available
590	GPRS - unknown IE from network
591	GPRS - implicitly detached
592	GPRS - insufficient resources
593	GPRS - invalid activation state (0-1)
594	GPRS - invalid address length
595	GPRS - invalid character in address string
596	GPRS - invalid CID value
597	GPRS - invalid dialstring length
598	GPRS - mode value not in range
599	GPRS - invalid MAND information

<err> Code	Text (if AT+CMEE=2)
600	GPRS - SMS service preference out of range
601	GPRS - invalid TI value
602	GPRS - IPCP negotiation timeout
603	GPRS - LCP negotiation timeout
604	GPRS - LLC error
605	GPRS - LLC or SNDCP failure
606	GPRS - lower layer failure
607	GPRS - missing or unknown APN
608	GPRS - mobile not ready
609	GPRS - MS identity not in network
610	GPRS - MSC temporary not reachable
611	GPRS - message incompatible with state
612	GPRS - message type incompatible with state
613	GPRS - unknown message from network
614	GPRS - NCP close
615	GPRS - network failure
616	GPRS - no echo reply
617	GPRS - no free NSAPIs
618	GPRS - processing of multiple CIDs not supported
619	GPRS - no PDP context activated
620	GPRS - normal termination
621	GPRS - NSAPI already used
622	GPRS - address element out of range
623	GPRS - PAP close
624	GPRS - PDP context w/o TFT already activated
625	GPRS - PDP type not supported
626	GPRS - peer refuses our ACCM
627	GPRS - peer refuses our IP address
628	GPRS - peer refuses our MRU
629	GPRS - peer rerequested CHAP
630	GPRS - profile (CID) not defined
631	GPRS - unspecified protocol error
632	GPRS - QOS not accepted
633	GPRS - QOS validation fail
634	GPRS - reactivation required
635	GPRS - regular deactivation
636	GPRS - semantic error in TFT operation
637	GPRS - semantic errors in packet filter
638	GPRS - semantically incorrect message
639	GPRS - service type not yet available
640	GPRS - syntactical error in TFT operation
641	GPRS - syntactical errors in packet filter

<err> Code	Text (if AT+CMEE=2)
642	GPRS - too many RXJs
643	GPRS - unknown PDP address or type
644	GPRS - unknown PDP context
645	GPRS - user authorisation failed
646	GPRS - QOS invalid parameter
647	GPRS - FDN failure
648	GPRS - bad default PDP context parameters
649	GPRS - bad PDP context parameters
650	GPRS - PDP context already active
660	GPRS - no echo reply
661	GPRS - syntactical error in TFT operation

Table 2.8: SMS related "CMS ERROR" Codes (GSM 07.05)

<err> Code	Text (if AT+CMEE=2)
1	unassigned (unallocated) number
8	operator determined barring
10	call barred
21	short message transfer rejected
27	destination out of service
28	unidentified subscriber
29	facility rejected
30	unknown subscriber
38	network out of order
41	temporary failure
42	congestion
47	resources unavailable, unspecified
50	requested facility not subscribed
69	requested facility not implemented
81	invalid short message transfer reference value
95	invalid message, unspecified
96	invalid mandatory information
97	message type non-existent or not implemented
98	message not compatible with short message protocol state
99	information element non-existent or not implemented
111	protocol error, unspecified
127	interworking, unspecified
128	telematic interworking not supported
129	short message type 0 not supported
130	cannot replace short message
143	unspecified TP-PID error
144	data coding scheme (alphabet) not supported
145	message class not supported

<err> Code	Text (if AT+CMEE=2)
159	unspecified TP-DCS error
160	command cannot be actioned
161	command unsupported
175	unspecified TP-command error
176	TPDU not supported
192	SC busy
193	no SC subscription
194	SC system failure
195	invalid SME address
196	destination SME barred
197	SM rejected-duplicate SM
198	TP-VPF not supported
199	TP-VP not supported
208	do SIM SMS storage full
209	no SMS storage capability in SIM
210	error in MS
211	memory capacity exceeded
212	SIM application toolkit busy
213	SIM data download error
255	unspecified error cause
300	ME failure
301	SMS service of ME reserved
302	operation not allowed
303	operation not supported
304	invalid PDU mode parameter
305	invalid text mode parameter
310	SIM not inserted
311	SIM PIN required
312	PH-SIM PIN required
313	SIM failure
314	SIM busy
315	SIM wrong
316	SIM PUK required
317	SIM PIN2 required
318	SIM PUK2 required
320	memory failure
321	invalid memory index
322	memory full
330	SMSC address unknown
331	no network service
332	network timeout
340	no +CNMA acknowledgement expected

<err> Code	Text (if AT+CMEE=2)
500	unknown error
516	invalid length
519	invalid length or character
520	invalid character in text
532	SIM not ready
533	unread records on SIM
534	CB error unknown
535	PS busy
536	couldn't read SMS parameters from SIM
537	SM BL not ready
538	invalid parameter
539	ME temporary not available
548	invalid (non-hex) chars in PDU
549	incorrect PDU length
550	invalid MTI (message type indication)
551	invalid (non-hex) chars in address
552	invalid address (no digits read)
553	incorrect PDU length (UDL)
554	incorrect SCA length
556	invalid first octet (should be 2 or 34)
557	invalid command type
558	SRR bit not set
559	SRR bit set
560	invalid user data header IE

Table 2.9: Java related "CME ERROR" Codes (proprietary)

<err> Code	Text (if AT+CMEE=2)
800	Java - unspecified error
801	Java - VM failure
802	Java - midlet not found
803	Java - midlet authentication failed
804	Java - midlet invalid descriptor
805	Java - midlet wrong configuration or profile
806	Java - liblet not found
807	Java - liblet authentication failed
808	Java - liblet invalid descriptor

2.13 AT+CSCS Select TE character set

The AT+CSCS write command informs the TA which character set <chset> is used by the TE. This enables the TA to convert character strings correctly between TE and ME character sets. See also Section 1.6, Supported character sets.
Note that when the TA-TE interface is set to 8-bit operation and the used TE alphabet is 7-bit, the highest bit will be set to zero.

Syntax

Test Command

```
AT+CSCS=?
```

Response(s)

```
+CSCS: (list of supported<chset>s)
OK
```

Read Command

```
AT+CSCS?
```

Response(s)

```
+CSCS: <chset>
OK
```

Write Command

```
AT+CSCS=[<chset>]
```

Response(s)

```
OK
ERROR
+CME ERROR: <err>
```

PIN	ASC0	ASC1	USB	MUX1	MUX2	MUX3	Charge	✈	Last
-	+	+	+	+	+	+	-	+	-

Reference(s)

GSM 07.07, GSM 11.11

Parameter Description

<chset>(str)	
"GSM"(&F)(P)	GSM default alphabet (GSM 03.38 subclause 6.2.1); Note: This setting may cause software flow control problems since the codes used to stop and resume data flow (XOFF = decimal 19, XON = decimal 17) are interpreted as normal characters.
"UCS2"	16-bit universal multiple-octet coded character set (ISO/IEC10646 [32]); UCS2 character strings are converted to hexadecimal numbers from 0000 to FFFF; e.g. "004100620063" equals three 16-bit characters with decimal values 65, 98 and 99.

2.14 AT^SCFG Extended Configuration Settings

AT^SCFG can be used to query and configure various settings of the TC65i.
AT^SCFG read command returns a list of all supported parameters and their current values.
AT^SCFG write command queries a configuration parameter (if no value is entered) or sets its value(s).
Input of parameter names is always coded in GSM character set, parameter values are expected to be given as specified via AT+CSCS.

Syntax

Test Command

AT^SCFG=?

Response(s)

^SCFG: "AutoExec" , (list of supported <AutoExecCmd>), (list of supported <AutoExecType>), (list of supported <AutoExecIndex>), (list of supported <AutoExecMode>), (max. string length of <AutoExecATC>), (time range of <AutoExecPeriod>)
^SCFG: "Call/ECC", (list of supported <ecc>s)
^SCFG: "GPRS/ATS0/withAttach", (list of supported <gs0aa>s)
^SCFG: "GPRS/AutoAttach", (list of supported <gaa>s)
^SCFG: "GPRS/PersistentContexts", (list of supported <gpc>s)
^SCFG: "GPRS/RingOnIncomingData", (list of supported <groid>s)
^SCFG: "MEopMode/Airplane", (list of supported <map>s)
^SCFG: "MEopMode/Airplane/OnStart", (list of supported <mapos>s)
^SCFG: "MEShutdown/OnIgnition", (list of supported <msi>s)
^SCFG: "PowerSaver/Mode9/Timeout", (list of supported <psm9to>s)
^SCFG: "Radio/Band", (list of supported <rbp>s), (list of supported <rba>s)
^SCFG: "Radio/CNS", (list of supported <cns>s)
^SCFG: "Radio/OutputPowerReduction", (list of supported <ropr>s)
^SCFG: "Serial/USB/DDD" , (list of supported <deviceDescr>s) , (list of supported <descrIndex>s) , (max. string length of <langId>) , (max. string length of <vendorId>) , (max. string length of <productId>) , (max. string length of <manufacturer>) , (max. string length of <product>) , (max. string length of <serialNo>)
^SCFG: "Tcp/BufSize", (list of supported <tcpBufSize>)
^SCFG: "Tcp/IRT", (list of supported <tcpIrt>)
^SCFG: "Tcp/MR", (list of supported <tcpMr>)
^SCFG: "Tcp/OT", (list of supported <tcpOt>)
^SCFG: "Tcp/SAck", (list of supported <tcpSack>)
^SCFG: "Tcp/TTcp", (list of supported <tcpTtcp>)
^SCFG: "Tcp/WithURCs", (list of supported <tcpWithUrc>)
^SCFG: "Trace/Syslog/OTAP", (list of supported <otapTracer>)
^SCFG: "URC/CallStatus/CIEV", (list of supported <succ>s)
^SCFG: "URC/CallStatus/SLCC", (list of supported <sucs>s)
^SCFG: "URC/Datamode/Ringline", (list of supported <udri>s)
^SCFG: "URC/Ringline", (list of supported <uri>s)
^SCFG: "URC/Ringline/ActiveTime", (list of supported <urat>s)
^SCFG: "Userware/Autostart/AppName", (max. string lengths of <uaa>)
^SCFG: "Userware/DebugInterface", (<udbgif1>), (<udbgif2>), (<udbgif3>)
^SCFG: "Userware/Mode", (list of supported <umode>), (length of <uurl>), (range of supported <uport>values)
^SCFG: "Userware/Stdout", (list of supported <if>), (list of supported <intvalue>), (<filename>), (list of supported <logmode>)
OK

Read Command

AT^SCFG?

Response(s)

^SCFG: "AutoExec" , <AutoExecCmd>, <AutoExecType>, <AutoExecIndex>, <AutoExecMode>, <AutoExecATC>[, <AutoExecPeriod>, <AutoExecPeriodTimeLeft>]
^SCFG: "Call/ECC", <ecc>
^SCFG: "GPRS/ATS0/withAttach", <gs0aa>
^SCFG: "GPRS/AutoAttach", <gaa>
^SCFG: "GPRS/PersistentContexts", <gpc>
^SCFG: "GPRS/RingOnIncomingData", <groid>
^SCFG: "MEopMode/Airplane", <map>
^SCFG: "MEopMode/Airplane/OnStart", <mapos>
^SCFG: "MEShutdown/OnIgnition", <msi>
^SCFG: "PowerSaver/Mode9/Timeout", <psm9to>
^SCFG: "Radio/Band", <rbc>, <rba>
^SCFG: "Radio/CNS", <cns>
^SCFG: "Radio/OutputPowerReduction", <ropr>
^SCFG: "Serial/USB/DDD" , <deviceDescr>, <descrIndex>, <langId>, <vendorId>, <productId>, <manufacturer>, <product>, <serialNo>
^SCFG: "Tcp/BufSize", <tcpBufSize>
^SCFG: "Tcp/IRT", <tcpIrt>
^SCFG: "Tcp/MR", <tcpMr>
^SCFG: "Tcp/OT", <tcpOt>
^SCFG: "Tcp/SAck", <tcpSack>
^SCFG: "Tcp/TTcp", <tcpTtcp>
^SCFG: "Tcp/WithURCs", <tcpWithUrc>
^SCFG: "Trace/Syslog/OTAP", <otapTracer>
^SCFG: "URC/CallStatus/CIEV", <succ>
^SCFG: "URC/CallStatus/SLCC", <sucs>
^SCFG: "URC/Datamode/Ringline", <udri>
^SCFG: "URC/Ringline", <uri>
^SCFG: "URC/Ringline/ActiveTime", <urat>
^SCFG: "Userware/Autostart/AppName", <uaa>
^SCFG: "Userware/DebugInterface", <udbgif1>, <udbgif2>, <udbgif3>
^SCFG: "Userware/Mode"
^SCFG: "Userware/Stdout", <if>[, <intvalue>[, <filename>[, <logmode>]]]
OK

Write Command

Automatic AT command execution

AT^SCFG="AutoExec" , <AutoExecCmd>, <AutoExecType>, <AutoExecIndex>[, <AutoExecMode>, <AutoExecATC>[, <AutoExecPeriod>]]

Response(s)

^SCFG: "AutoExec" , <AutoExecCmd>, <AutoExecType>, <AutoExecIndex>, <AutoExecMode>, <AutoExecATC>[, <AutoExecPeriod>, <AutoExecPeriodTimeLeft>]
OK
ERROR
+CME ERROR: <err>

Write Command

Query/Configure Emergency numbers for SIM without ECC field

AT^SCFG="Call/ECC"[, <ecc>]

Response(s)

^SCFG: "Call/ECC", <ecc>
OK

Write Command (Continued)

Query/Configure Emergency numbers for SIM without ECC field

AT^SCFG="Call/ECC"[, <ecc>]

Response(s)

ERROR
+CME ERROR: <err>

Write Command

GPRS ATS0 with automatic attach

AT^SCFG="GPRS/ATS0/withAttach"[, <gs0aa>]

Response(s)

^SCFG: "GPRS/ATS0/withAttach", <gs0aa>
OK
ERROR
+CME ERROR: <err>

Write Command

Automatic GPRS attach

AT^SCFG="GPRS/AutoAttach"[, <gaa>]

Response(s)

^SCFG: "GPRS/AutoAttach", <gaa>
OK
ERROR
+CME ERROR: <err>

Write Command

Persistent GPRS contexts

AT^SCFG="GPRS/PersistentContexts"[, <gpc>]

Response(s)

^SCFG: "GPRS/PersistentContexts", <gpc>
OK
ERROR
+CME ERROR: <err>

Write Command

Ring on incoming GPRS IP data packets

AT^SCFG="GPRS/RingOnIncomingData"[, <groid>]

Response(s)

^SCFG: "GPRS/RingOnIncomingData", <groid>
OK
ERROR
+CME ERROR: <err>

Write Command

Enable/disable Airplane mode during operation

AT^SCFG="MEopMode/Airplane"[, <map>]

Response(s)

^SCFG: "MEopMode/Airplane", <map>
OK
ERROR
+CME ERROR: <err>

Write Command

Airplane mode upon ME restart

AT^SCFG="MEopMode/Airplane/OnStart"[, <mapos>]

Response(s)

^SCFG: "MEopMode/Airplane/OnStart", <mapos>
OK
ERROR
+CME ERROR: <err>

Write Command

Enable/disable shutdown by ignition line

AT^SCFG="MEShutdown/OnIgnition"[, <msi>]

Response(s)

^SCFG: "MEShutdown/OnIgnition", <msi>
OK
ERROR
+CME ERROR: <err>

Write Command

Query/Set timeout value for power saving mode 9

AT^SCFG="PowerSaver/Mode9/Timeout"[, <psm9to>]

Response(s)

^SCFG: "PowerSaver/Mode9/Timeout", <psm9to>
OK
ERROR
+CME ERROR: <err>

Write Command

Radio band selection

AT^SCFG="Radio/Band"[, <rbp>][, <rba>]

Response(s)

^SCFG: "Radio/Band", <rbp>, <rba>
OK
ERROR
+CME ERROR: <err>

Write Command

Query/Enable/Disable Continuous Network Search

AT^SCFG="Radio/CNS"[, <cns>]

Response(s)

^SCFG: "Radio/CNS", <cns>
OK
ERROR
+CME ERROR: <err>

Write Command

Radio output power reduction

AT^SCFG="Radio/OutputPowerReduction"[, <ropr>]

Response(s)

^SCFG: "Radio/OutputPowerReduction", <ropr>
OK
ERROR
+CME ERROR: <err>

Write Command

Configuration of TCP parameter 'BufSize':

AT^SCFG="Tcp/BufSize"[, <tcpBufSize>]

Response(s)

^SCFG: "Tcp/BufSize", <tcpBufSize>
OK
ERROR
+CME ERROR: <err>

Write Command

Configuration of TCP parameter 'InitialRetransmissionTimeout':

AT^SCFG="Tcp/IRT"[, <tcpIrt>]

Response(s)

^SCFG: "Tcp/IRT", <tcpIrt>
OK
ERROR
+CME ERROR: <err>

Write Command

Configuration of TCP parameter 'MaxRetransmissions':

AT^SCFG="Tcp/MR"[, <tcpMr>]

Response(s)

^SCFG: "Tcp/MR", <tcpMr>
OK
ERROR
+CME ERROR: <err>

Write Command

Configuration of TCP parameter 'OverallTimeout':

AT^SCFG="Tcp/OT"[, <tcpOt>]

Response(s)

^SCFG: "Tcp/OT", <tcpOt>
OK
ERROR
+CME ERROR: <err>

Write Command

Configuration of TCP parameter 'Selective Acknowledge':

AT^SCFG="Tcp/SAck"[, <tcpSack>]

Response(s)

^SCFG: "Tcp/SAck", <tcpSack>
OK
ERROR
+CME ERROR: <err>

Write Command

Configuration of Internet Service URCs:

AT^SCFG="Tcp/WithURCs"[, <tcpWithUrc>]

Response(s)

^SCFG: "Tcp/WithURCs", <tcpWithUrc>
OK
ERROR
+CME ERROR: <err>

Write Command

Tracing:

AT^SCFG="Trace/Syslog/OTAP"[, <otapTracer>]

Response(s)

^SCFG: "Trace/Syslog/OTAP", <otapTracer>
SYSLOG ENABLED
ERROR
+CME ERROR: <err>

Write Command

USB Device Descriptor:

AT^SCFG="Serial/USB/DDD" [, <deviceDescr>, [<descrIndex>], [<langId>], <vendorId>, <productId>, [<manufacturer>], [<product>], [<serialNo>]]

Response(s)

^SCFG: "Serial/USB/DDD" , <deviceDescr>, <descrIndex>, <langId>, <vendorId>, <productId>, <manufacturer>, <product>, <serialNo>
OK
ERROR
+CME ERROR: <err>

Write Command

Configuration of URC "+CIEV: call" Call Status Indication

AT^SCFG="URC/CallStatus/CIEV"[, <succ>]

Response(s)

^SCFG: "URC/CallStatus/CIEV", <succ>
OK
ERROR
+CME ERROR: <err>

Write Command

Configuration of URC "^SLCC" Call Status Indication

AT^SCFG="URC/CallStatus/SLCC"[, <sucs>]

Response(s)

^SCFG: "URC/CallStatus/SLCC", <sucs>
OK
ERROR
+CME ERROR: <err>

Write Command

URC indication in datamode via Ring line:

AT^SCFG="URC/Datamode/Ringline"[, <udri>]

Response(s)

^SCFG: "URC/Datamode/Ringline", <udri>
OK
ERROR
+CME ERROR: <err>

Write Command

URC indication via Ring line:

AT^SCFG="URC/Ringline"[, <uri>]

Response(s)

^SCFG: "URC/Ringline", <uri>
OK

Write Command (Continued)

URC indication via Ring line:

AT^SCFG="URC/Ringline"[, <uri>]

Response(s)

ERROR
+CME ERROR: <err>

Write Command

Duration of active RING line for URC indications:

AT^SCFG="URC/Ringline/ActiveTime"[, <urat>]

Response(s)

^SCFG: "URC/Ringline/ActiveTime", <urat>
OK
ERROR
+CME ERROR: <err>

Write Command

Userware autostart status:

AT^SCFG="Userware/Autostart"[, <upwd>, <ua>]

Response(s)

^SCFG: "Userware/Autostart"[, <ua>]
OK
ERROR
+CME ERROR: <err>

Write Command

Userware autostart application:

AT^SCFG="Userware/Autostart/AppName"[, <upwd>, <uaa>]

Response(s)

^SCFG: "Userware/Autostart/AppName"[, <uaa>]
OK
ERROR
+CME ERROR: <err>

Write Command

Userware autostart delay:

AT^SCFG="Userware/Autostart/Delay"[, <upwd>, <uad>]

Response(s)

^SCFG: "Userware/Autostart/Delay"[, <uad>]
OK
ERROR
+CME ERROR: <err>

Write Command

Userware configuration password:

AT^SCFG="Userware/Passwd"[, $<upwd>_{old}$, $<upwd>_{new}$, $<upwd>_{new}$]

Response(s)

^SCFG: "Userware/Passwd"
OK
ERROR
+CME ERROR: <err>

Write Command

Userware debug interface:

AT^SCFG="Userware/DebugInterface"[, <udbgif1>, <udbgif2>[, <udbgif3>]]

Response(s)

^SCFG: "Userware/DebugInterface", <udbgif1>, <udbgif2>, <udbgif3>
OK
ERROR
+CME ERROR: <err>

Write Command

Userware mode:

AT^SCFG="Userware/Mode"[, <umode>, <uurl>, <uport>]

Response(s)

^SCFG: "Userware/Mode", <umode>, <uurl>, <uport>
OK
ERROR
+CME ERROR: <err>

Write Command

Standard output of userware:

AT^SCFG="Userware/Stdout"[, <if>[, <intvalue>][, <filename>][, <logmode>]]

Response(s)

^SCFG: "Stdout" , <if>[, <intvalue>[, <filename>[, <logmode>]]]
OK
ERROR
+CME ERROR: <err>

Write Command

Watchdog configuration and control:

AT^SCFG="Userware/Watchdog"[, <wd>]

Response(s)

^SCFG: "Watchdog", <wd>
OK
ERROR
+CME ERROR: <err>

PIN	ASC0	ASC1	USB	MUX1	MUX2	MUX3	Charge	✈	Last
-	+	+	+	+	+	+	±	±	-

Unsolicited Result Codes

URC 1

^SCFG: "AutoExec", <AutoExecState>, <AutoExecType>, <AutoExecIndex>, <AutoExecMode>, <AutoExecATC>

If the event specified with <AutoExecType> occurs and the related AT command line is executed this URC is issued.

URC 2

^SYSSTART AIRPLANE MODE

This URC is issued each time the Airplane mode is activated, no matter whether Airplane mode is set with parameter <map>="on" or <mapos>="on". The URC notifies the user that only the AT commands supported in Airplane mode are accessible. After leaving the Airplane mode the URC "^SYSSTART" indicates that the ME has returned to Normal mode and the full set of AT commands is accessible again.

Parameter Description

<AutoExecCmd>(str)(+CSCS)

AutoExec Command

This parameter serves to switch the Autoexec function on or off.
If it is switched off (<AutoExecCmd>=0), parameters following <AutoExecIndex> are ignored and all settings at the given index are restored to their default values.
Value will be saved while switching off the TC65i via AT commands (e.g. AT+CFUN or AT^SMSO) and restored on next power up.

"0"	Disable automatic execution of the AT command(s) specified with <AutoExecATC> at a given <AutoExecIndex>.
"1"	Enable automatic execution of the AT command(s) specified with <AutoExecATC> at a given <AutoExecIndex>. Not allowed for <AutoExecType>=0 (DTR line activation) while multiplex mode is active, refer to AT+CMUX.

<AutoExecType>(str)(+CSCS)

AutoExec Event Type

This parameter selects the kind of event used to automatically launch the AT command(s) specified with <AutoExecATC>.
Value will be saved while switching off the TC65i via AT commands (e.g. AT+CFUN or AT^SMSO) and restored on next power up.

"0"	Autoexec activity is driven by ASC0 DTR line activation (OFF-ON transition).
"1"	Autoexec activity is timer driven. To specify the time span use <AutoExecPeriod>.

<AutoExecIndex>(str)(+CSCS)

AutoExec Command Index

This parameter specifies the command storage index. The following table shows the index ranges supported for each variant of <AutoExecType>.
Value will be saved while switching off the TC65i via AT commands (e.g. AT+CFUN or AT^SMSO) and restored on next power up.

<AutoExecType> value	<AutoExecType> event	Valid Indices
0	Autoexec activity is driven by ASC0 DTR line activation	0
1	Autoexec activity is timer driven.	0-2

<AutoExecMode>(str)(+CSCS)

AutoExec Command Mode

0...255

This parameter specifies details regarding the behavior of the TC65i when the AT command starts to be executed.
Value is interpreted as a bit field, unused bits are reserved for future use (RFU) and shall be set to 0.
When a call is released by an Autoexec activity, no release indication may be issued on the first logical channel.
Value will be saved while switching off the TC65i via AT commands (e.g. AT+CFUN or AT^SMSO) and restored on next power up.

Bit	$Mask_{hex}$	$Mask_{dec}$	Control
D_0 D_1	0x00 0x01 0x02 0x03	0 1 2 3	00: Ignore ongoing calls 01: Wait until all calls have ended 10: Dismiss any ongoing call 11: RFU
D_2	0x04	4	0: One shot action 1: Periodic action (for "AutoExec/Period" only)
D_3	0x08	8	RFU
D_4	0x10	16	RFU
D_5	0x20	32	RFU
D_6	0x40	64	RFU
D_7	0x80	128	RFU

`<AutoExecATC>`(str)(+CSCS)

AutoExec AT command String

This parameter specifies the AT command(s) to be launched automatically. Each AT command is executed in the same way as if it were entered online, this means that command concatenation is possible if supported by the given commands. If serial multiplex mode is activated (AT+CMUX) the first logical channel is used, i.e. CSD calls (data or fax) could be set up. If the TC65i is busy on the serial channel command execution will be delayed until ongoing action is finished.
The first two characters of the automatically launched AT command shall be "at".
Please refer to examples below.
Value will be saved while switching off the TC65i via AT commands (e.g. AT+CFUN or AT^SMSO) and restored on next power up.

`<AutoExecPeriod>`(str)(+CSCS)

AutoExec Command Period

Parameter specifies the period after which <AutoExecATC> will be executed. Format is "hhh:mm:ss", where characters indicate hours, minutes and seconds. This parameter applies to <AutoExecType>=1 only.
Value will be saved while switching off the TC65i via AT commands (e.g. AT+CFUN or AT^SMSO) and restored on next power up.
When using this feature with running java applications, please consider the minimum time for the execution of AT+CFUN or AT^SMSO is 15 seconds.

000:00:05...240:00:00

`<AutoExecPeriodTimeLeft>`(str)(+CSCS)

AutoExec Command Period Left

This parameter shows the amount of time left until <AutoExecATC> will be executed. Format is "hhh:mm:ss", where characters indicate hours, minutes and seconds. This parameter applies to <AutoExecType>=1 only.
Due to the internal activity and network signaling an execution delay of several seconds may occur for the overall procedure.

000:00:00...240:00:00

`<AutoExecState>`(str)(+CSCS)

AutoExec Command Status

This parameter is part of the Autoexec URC which is presented when a scheduled Autoexec activity is being performed.

“1“ The value 1 indicates that the Autoexec activity specified with <AutoExec-ATC> is currently executed.

<ecc>(str)(+CSCS)

Emergency call numbers on non-ECC SIM

This parameter specifies emergency call numbers on SIM cards without ECC field. The parameter has no influence on the commonly used emergency numbers 112 and 911 which are always supported.
Please refer also to Section 7.3, ATD where you can find a list of emergency call numbers supported if no SIM is inserted.
The value range of <ecc> is "0"..."255". To select or deselect an emergency number calculate the sum of the values of all desired numbers and use the resulting value. For example, for "08" (2) and "118" (8) please enter the value (10).
Parameter is global for the ME, non-volatile and will not be reset by AT&F.

“ 0“	No additional emergency numbers
“ 1“	000
“ 2“	08
“ 4“	110
“ 8“	118
“16“	119
“32“	999
“64“	Reserved
“128“	Reserved
“255“(D)	All additional emergency call numbers are supported.

<gs0aa>(str)(+CSCS)

GPRS ATS0 with Attach

This parameter can be used to control the behaviour of ATS0.
Parameter is global for all interfaces, volatile and will not be reset by AT&F.

“on“(P)	When the ATS0=<n> (<n>>0) command is received, the MT will attempt to perform a GPRS attach.
“off“	When the ATS0=<n> (<n>>0) command is received, the MT will not attempt to perform a GPRS attach.

<gaa>(str)(+CSCS)

GPRS with AutoAttach

This parameter can be used to control whether the ME will perform a GPRS attach immediately after power-up and registering to the network or not. If the setting is changed to "enabled" and the ME is not attached yet, it will not initiate an attach immediately but after the next power-up and registration to the network.
Parameter is global for all interfaces, non volatile and will not be reset by AT&F.

“disabled“(D)	GPRS auto attach is disabled
“enabled“	GPRS auto attach is enabled

<gpc>(str)(+CSCS)

GPRS with persistent contexts

This parameter can be used to control whether the ME will store the GPRS context information defined by the AT+CGDCONT volatile or non volatile.
Parameter is global for all interfaces, non volatile and will not be reset by AT&F.

“0“(D)	GPRS context definitions are volatile.
“1“	GPRS context definitions are non-volatile and will not be reset by AT&F.

<groid>(str)(+CSCS)

Ring on incoming GPRS IP data packets

This parameter can be used to control the behaviour of the RING line for incoming IP packets in GPRS online mode.
Parameter is local for the interface, volatile and will not be reset by AT&F.

“on“	If the ME is in power saving mode 7 or 9 (see AT+CFUN) and hardware flow control is in use (AT\Q3) and the RTS line is inactive and there are incoming IP packets for a GPRS context which is online, then the RING line will be activated once, for a time which is configured by the parameter "URC/Ringline/ActiveTime" (<urat>). The RING line to be used can be configured with the parameter "URC/Ringline" (<uri>).
“off“(P)	RING line is not activated for incoming IP packets.

<map>(str)(+CSCS)

MEopMode/Airplane: Enable/disable Airplane mode during operation

The two parameters <map> and <mapos> can be used to enable/disable the Airplane mode. Airplane mode shuts down the radio part of the ME (PA and receiver), causes the ME to log off from the GSM/GPRS network and disables all AT commands whose execution requires a radio connection. A list of AT commands supported during Airplane mode can be found in Section 23.4, Availability of AT Commands Depending on Operating Mode of ME. The benefit of Airplane mode is that, at locations where no RF emission is allowed (typically airplanes, hospitals etc.), the subscriber can continue using network-independent features rather than powering off the entire device (e.g. a PDA or smartphone).
If the subscriber tries to use an AT command not available in Airplane mode the response "+CME ERROR: unsupported AT command" is returned.

Parameter <map> allows entering or leaving the Airplane mode any time during operation, eliminating the need to enter the SIM PIN again. It can be used no matter whether the parameter <mapos> is "on" or "off".
Parameter <map> is global for all interfaces, volatile and will not be reset by AT&F.

“on“	Activates Airplane mode and shuts down the radio part of the ME. The URC "^SYSSTART AIRPLANE MODE" appears.
“off“(P)	Deactivates Airplane mode, wakes up the radio part of the ME and restores access to network-dependent AT commands. The URC "^SYSSTART" appears.

<mapos>(str)(+CSCS)

MEopMode/Airplane: Airplane mode upon ME restart

There are two ways to enter Airplane mode upon restart: One is using AT^SCFG with <mapos> as described below.
Another approach is configuring the ME to restart into Airplane mode at a scheduled time. In this case, use the AT+CALA command, set an alarm time and then switch the ME off. When the alarm time is reached the ME wakes up to Airplane mode, no matter whether <mapos> was set "on" or "off".
Parameter <mapos> is global for all interfaces, non volatile and will not be reset by AT&F.

“on“	Causes the ME to enter the Airplane mode each time the ME is restarted or reset. After restart or reset, the URC "^SYSSTART AIRPLANE MODE" appears and parameter <map> is "on". The SIM PIN can be entered using the AT+CPIN command. This enables the ME to read data from the SIM and give access to SIM PIN dependent AT commands which are available in Airplane mode, such as phonebook commands or several SMS commands. To notify the user when SIM data are accessible it is recommended to activate the "^SSIM READY" URC and store its presentation mode to the user profile with AT&W. To return from Airplane mode to Normal mode set the parameter <map> to "off" as described above. If PIN authentication was already done, the ME will try now to register to the GSM network.
“off“(P)	Airplane mode will not be activated after ME restart or reset.

<msi>(str)(+CSCS)

MEShutdown/OnIgnition: Enable/disable shutdown by IGT line

The parameter specifies two different switching modes of the ignition line IGT: The line may either be used only to switch on the ME, or to switch it on and off.
By factory default the module's IGT line is configured only for switching on the ME. We recommend that great care be taken before changing the switch mode of IGT. It is of vital importance that the following conditions are met to ensure that IGT works properly as ON/OFF switch:
Switch-on condition: If the ME is off the IGT line must be asserted for at least 400 ms and then released.
Switch-off condition: If the ME is on the IGT line must be asserted for at least 1 s and then released. The switch-off routine is identical with the shutdown procedure initiated by the AT^SMSO command, i.e. the ME performs an orderly shutdown and issues the "^SHUTDOWN" URC.
Before switching off the ME wait at least 2 seconds after startup.
Furthermore, particular attention shall be given to the USB interface and the DTR signal: The USB interface and the DTR line shall either be decoupled from IGT to avoid unintentional shutdown of the ME, or require special precautions if you wish to restart the ME by plugging the USB cable or to toggle IGT from DTR. For further details please refer to [2].
Parameter <msi> is global for all interfaces, non-volatile and will not be reset by AT&F.

“on“	Ignition line (IGT) can be used to switch on and off the ME.
“off“	Ignition line (IGT) can be used to switch on the ME.

<psm9to>(str)(+CSCS)

Power saving mode 9 timeout

This parameter can be used to query or configure the wake up time for power saving mode 9 (see AT+CFUN with parameter <fun>=9).
Parameter is global for the ME, volatile and will not be reset by AT&F.

5...20(P)...36000	The granularity of the timeout value is 100ms (i.e. a value of 10 equal 1 second). The minimum timeout value that can be applied is 5, but accuracy is only guaranteed for timeout values greater than 20.

<rba>(str)(+CSCS)

Allowed radio band(s)

The feature "Radio/Band" with its parameters <rba>, <rbp> and <rbc> can be used to set and query preferences for selecting frequency bands.
The TC65i normally uses an automode algorithm designed to recognize automatically the radio bands of the current country, typically a combination of two bands. Commonly used dual-band combinations are, for example, 900/1800 MHz in European countries or 850/1900 MHz in North America. The standard radio band combination of a country depends on the ARFCNs (Absolute Frequency Channel Number) and the MCCs (Mobile Country Code) visible at the air interface. This enables the ME to easily find the standard band or band combination of a country every time after power-up and, thus, usually eliminates the need for the subscriber to make any changes. So, if automode is used and the allowed bands are not restricted with <rba> the response parameter <rbc> shows the standard band(s) of the current area.
As an alternative, if any bands other than those automatically selected by the ME are needed, the automode can be influenced using the AT^SCFG command. This may be necessary, for example, when running tests of GSM applications, when access to specific radio bands shall be restricted or when the final product is not intended for operation in certain countries.
Before changing the parameters <rba> or <rbp> ensure that no network activity occurs. The write command cannot be executed when making a call, or sending / receiving short messages.
Execution of the write command causes the ME to deregister from and re-register to the network, no matter whether the selected <rbp> or <rba> setting really changes. Therefore, it is useful to have the URC "+CREG" enabled. The status of the SIM PIN authentication remains unchanged, eliminating the need to enter the SIM PIN again after the change.

The parameter <rba> is intended to restrict the allowed bands to less than four bands. By default, all four bands are allowed. Each band not contained in <rba> is generally disabled.
All bands of <rbp> must be contained in the range set with <rba>. The response parameter <rbc> will never

show a value outside the <rba> range. <rba> has precedence over <rbp> and <rbc>.
The <rba> value to select resp. deselect radio bands can be either a single band value or a multiple band value as listed below.
Parameter <rba> is global for the ME, non-volatile and will not be reset by AT&F.

“1“	GSM 900 MHz
“2“	GSM 1800 MHz
“4“	GSM 1900 MHz
“8“	GSM 850 MHz
“3“	GSM 900 MHz + GSM 1800 MHz
“5“	GSM 900 MHz + GSM 1900 MHz
“10“	GSM 850 MHz + GSM 1800 MHz
“12“	GSM 850 MHz + GSM 1900 MHz
“15“	GSM 900 MHz + GSM 1800 MHz + GSM 850 MHz + GSM 1900 MHz

<rbp>(str)(+CSCS)

Preferred radio band(s)

The write command will trigger the band selection, starting with the user preference specified by <rbp>. This means bands contained in <rbp> will be searched first, regardless of the standard band combination of the current country. The final result of the band selection can be read from <rbc>.
If <rbp> was a band or band combination which differs from the standard band(s) and the requested band(s) are not visible at the air interface the ME reverts to the standard band(s) of this country. Please note that the band selection procedure is independent of the registration procedure, i.e. the ME selects a band no matter whether or not there is a PLMN (Public Land Mobile Network) the ME can register to. So, if the <rbp> was a band or band combination supported by the country, but currently no PLMN can be found, the ME will select the "preferred" band (indicated by <rbc>) without registering to the network. To avoid registration problems, for example when the settings are configured for testing the GSM application it is recommended that the tester first activates the desired band(s) on the test equipment and then executes the AT^SCFG write command. Besides remember that the network registration also depends on the settings made with AT+COPS.
The <rbp> is volatile and cannot be read back with the AT^SCFG read command. This is because the value is used only for triggering one single search operation.
The parameter <rbp> may be one of the single bands or band combinations listed below. All preferred bands must be contained in the range of allowed bands set with <rba>, invalid combinations are not accepted. To give priority to a certain single band or band combination and suppress all others simply select the same value both for <rbp> and <rba>.

“1“	GSM 900 MHz
“2“	GSM 1800 MHz
“4“	GSM 1900 MHz
“8“	GSM 850 MHz
“3“	GSM 900 MHz + GSM 1800 MHz
“5“	GSM 900 MHz + GSM 1900 MHz
“10“	GSM 850 MHz + GSM 1800 MHz
“12“	GSM 850 MHz + GSM 1900 MHz
“15“	GSM 900 MHz + GSM 1800 MHz + GSM 850 MHz + GSM 1900 MHz

<rbc>(str)(+CSCS)

Currently selected radio band(s)

<rbc> is the single band or band combination currently used by the ME, found either by the automode algorithm or after the network search was triggered with <rbp>. The <rbc> value is saved on power down. When restarted next time the ME tries to select the same band(s) if these are visible. If the band(s) stored with <rbc> are not visible the ME uses the standard band(s) of the current country and consequently updates the <rbc> value.

<rbc> is only a response parameter returned either after sending the read command AT^SCFG? or writing AT^SCFG="Radio/Band".
In addition to <rbc> and to allow the subscriber to be notified whenever the selected band changes it is recommended to activate the "+CIEV: band" (see Section 3.3, AT^SIND).

“1“	GSM 900 MHz
“2“	GSM 1800 MHz
“4“	GSM 1900 MHz
“8“	GSM 850 MHz
“3“	GSM 900 MHz + GSM 1800 MHz
“5“	GSM 900 MHz + GSM 1900 MHz
“10“	GSM 850 MHz + GSM 1800 MHz
“12“	GSM 850 MHz + GSM 1900 MHz
“15“	GSM 900 MHz + GSM 1800 MHz + GSM 850 MHz + GSM 1900 MHz

<cns>(str)(+CSCS)

Continuous Network Search Mode

This parameter can be used to influence the time the ME takes to register to the network.
Parameter is global for the ME, volatile and will not be reset by AT&F.

“0“(P)	Normal When trying to register to a network the ME sleeps longer than in "Fast mode" before restarting a network scan.
“1“	Fast "Fast mode" reduces the time the ME sleeps before restarting a network scan when trying to register. Advantage: If the ME is out of network service it may take less time to find a network. Disadvantage: Higher current consumption while the ME is out of network service.

Note: To monitor the search process it may be useful to have the "+CREG" URC enabled. Each time the network search starts, the URC "+CREG" equals "2" (searching). When the network search stops, the URC is issued again, indicating either "0" (not registered), or "1" (registered) or "5" (registered, roaming). As long as no network can be found, the URC will be toggling between "2" and "0".

<ropr>(str)(+CSCS)

Radio Output Power Reduction

According to 3GPP Rel99, output power reduction for multiple TX slots is a mandatory feature. The amount of power reduction is configurable up to 3.0dB for 2TX, 4.8dB for 3Tx to 6dB for 4TX. To optimize heat dissipation, power consumption and SAR values it is recommended to use full power reduction (value "3").
Parameter is global for all interfaces, volatile and will not be reset by AT&F.

“1“	Medium Reduction at GMSK (0dB reduction for 1TX and 2TX, 1.8dB for 3TX and 3dB for 4TX)
“2“	Maximal Reduction at GMSK (0dB reduction for 1TX, 3dB for 2TX, 4.8dB for 3TX and 6dB for 4TX)
“3“(P)	Maximal Reduction at GMSK (0dB reduction for 1TX, 3dB for 2TX, 4.8dB for 3TX and 6dB for 4TX)

<tcpBufSize>(str)(+CSCS)

BufferSize

This value defines the default size of the TCP receive queue in bytes. Higher values allow higher throughput but less number of parallel connections. The total throughput is limited by the GPRS/EDGE network resources and cannot exceed the theoretical maximum gross throughput of 230Kbit.
Parameter is global for the ME and non-volatile. Use of default value is recommended. If changed the new value takes effect the next time you start an Internet service with AT^SISO.

3000...5200(&F)(D)...20000	Size of TCP receive buffer in bytes. Possible number of parallel socket connections depending on buffer size: - 5200 bytes (default): max. 8 connections - 10000 bytes (medium): max. 4 connections - 20000 bytes (high): max. 2 connections

<tcpIrt>(str)(+CSCS)

Initial Retransmission Timeout (IRT)

1...3(&F)(D)...60	This parameter determines the time (in seconds) the TCP/IP stack will wait before starting the first retransmission of packets during the initial connection establishment phase. The TCP protocol ensures the retransmission of packets several times at increasing intervals until some upper limit is reached. This mechanism prevents packet loss and serious congestion problems. Parameter is global for the ME and non-volatile. Use of default value is recommended. If changed the new value takes effect the next time you start an Internet service with AT^SISO.

<tcpMr>(str)(+CSCS)

Maximum Number of Retransmissions (MR)

1...10(&F)(D)...30	This parameter determines the maximum number of times to retransmit TCP packets while the service is in connected state. If the service is still connecting (connection setup) another algorithm applies. The value set with <tcpMr> will be assumed as default for the <srvParmTag> "tcpMR" when a new service profile is created with AT^SISS. In each service profile, you can set another "tcpMR" value which has precedence over the global value set with AT^SCFG. Existing service profiles are not affected when you change the global value via AT^SCFG. Parameter is global for the ME and non-volatile. Use of default value is recommended.

<tcpOt>(str)(+CSCS)

Overall TCP Timer for outstanding connections (tcpOT)

1...6000(&F)(D)	This parameter specifies the number of seconds to wait before closing a connection if TCP/IP packets are not acknowledged. Setting the maximum value is practically equivalent to deactivating the tcpOT mechanism because the maximum time would never be reached by the TCP/IP stack. The value set with <tcpOt> will be assumed as default for the <srvParmTag> "tcpOT" when a new service profile is created with AT^SISS. However, in each service profile, you can set another "tcpOT" value which has precedence over the global value set with AT^SCFG. Existing service profiles are not affected when you change the global value via AT^SCFG. Parameter is non-volatile. Use of default value is recommended.

`<tcpSack>`(str)(+CSCS)

Selective Acknowledge (SAck)

This parameter concerns a set of TCP extensions to improve performance and to provide reliable operation. It defines new TCP options for scaled windows and timestamps, which are designed to provide compatible interworking with TCPs that do not implement the extensions.
The set of TCP extensions to improve performance is described in RFC 1323. The value set with `<tcpSack>` enables or disables the set of TCP extensions.
Parameter is global for the ME. Use of powerup value is recommended.

“0“	Disable set of TCP extensions.
“1“(P)	Enable set of TCP extensions.

`<tcpTtcp>`(str)(+CSCS)

Transaction/TCP (T/TCP)

This parameter concerns T/TCP, an extension of TCP to provide a transaction-oriented service.
T/TCP is described in RFC 1644. The value set with `<tcpTtcp>` enables or disables T/TCP.
Parameter is global for the ME. Use of powerup value is recommended.

“0“(P)	Disable T/TCP extension.
“1“	Enable T/TCP extension.

`<tcpWithUrc>`(str)(+CSCS)

URC mode or polling mode for Internet service commands

This parameter enables or disables the presentation of the following URCs related to Internet service commands: "`^SISR`" URC, "`^SISW`" URC and "`^SIS`" URC for parameter `<urcCause>`=0 (Internet service events). "`^SIS`" URCs with `<urcCause>`=1 or 2 used to indicate incoming Socket connections are always enabled.
Parameter is global for the ME and non-volatile.

“on“(&F)(D)	Enable URCs related to Internet service commands. Throughout the Chapter "Internet Service AT Commands" the mode is also referred to as URC mode.
“off“	Disable URCs related to Internet service commands. This requires the host application to employ polling techniques when using the Internet service AT commands: The host application is responsible to retrieve all status information needed to control an Internet session. The method is referred to as polling mode.

`<otapTracer>`(str)(+CSCS)

OTAP tracer

This parameter enables a trace output of the Over The Air procedure. The tracer is useful for obtaining additional information when setting up an OTAP scenario. The output is provided on the interface on which the command was entered. While the tracer is enabled the interface is used for trace output only, meaning that no AT commands can be entered. The tracer will be switched off only by a reset of the module, e.g. after a completed OTAP procedure.

“1“	Enable OTAP tracer.

`<deviceDescr>`(str)(+CSCS)

Device Descriptor

This parameter determines whether to use the ME's standard USB Device Descriptor configuration (default) or a Device Descriptor configuration customized by the application manufacturer.
Parameter is global, stored non-volatile in ME and not reset by AT&F. Setting will be active after TC65i restart.

"0"(D)	Standard USB Device Descriptor of the ME. If <deviceDescr>=0 is set all other parameters related to "Serial/USB/DDD" cannot be changed. For use in a Windows environment, the "usbmodem.inf" file delivered with TC65i shall be present. Note that whenever the TC65i firmware is updated over the USB interface the ME's standard configuration must be present. Therefore, before starting a TC65i firmware download be sure that <deviceDescr>=0 is activated and, under Windows, the ME's "usbmodem.inf" file can be found. Remember to restart the ME after reverting to <deviceDescr>=0 and before starting the firmware download.
"1"	Customer specific USB Device Descriptor. If <deviceDescr>=1 is set all other parameters related to "Serial/USB/DDD" can be changed. Customizing the USB Device Descriptor configuration requires a unique Vendor ID obtained from the USB Implementers Forum. For information please refer to http://www.usb.org. For use under Windows a customized INF file for the USB modem must be present. An easy way to create this file is copying the ME's "usbmodem.inf" file and overwriting the equivalent values changed with AT^SCFG, usually at least the Vendor ID, Product ID and, optionally, the manufacturer string. This is because the strings given for the customized "Serial/USB/DDD" parameters must be identical with those contained in the INF file.

`<descrIndex>`(str)(+CSCS)

Descriptor Index

As the TC65i shall be capable of holding 0 - 3 customized Device Desciptor configurations, the <descrIndex> allows to create and select different parameter sets consisting of the parameters listed below.
Please note that TC65i Release 01.100 supports only one parameter set associated to value 0.
Parameter is global, stored non-volatile in ME and not reset by AT&F. Setting will be active after TC65i restart.
Please note that this parameter is effective only if the customized Device Descriptor <deviceDescr>=1 is enabled.

"0"(D)	Index for the first descriptor definition.
"1"	Future use.
"2"	Future use.
"3"	Future use.

`<langId>`(str)(+CSCS)

Language ID

Please refer to USB.ORG [29] to find the language IDs currently defined for USB devices. If parameter <langId> is not specified, the default value of the ME's standard USB Device Descriptor configuration applies (US English).
Parameter is global, stored non-volatile in ME and not reset by AT&F. Setting will be active after TC65i restart.
Parameter length: maximum 4 characters.
Please note that this parameter is effective only if the customized Device Descriptor <deviceDescr>=1 is enabled.

<vendorId>(str)(+CSCS)

Vendor ID

This parameter represents the Vendor ID obtained from the USB Implementers Forum. The Vendor ID will, together with the Product ID, be transmitted to the host during initialization. The given Vendor ID must be included in the INF file needed for Windows.
Parameter is global, stored non-volatile in ME and not reset by AT&F. Setting will be active after TC65i restart.
Parameter length: maximum 4 characters.
Please note that this parameter is effective only if the customized Device Descriptor <deviceDescr>=1 is enabled.

<productId>(str)(+CSCS)

Product ID

Product ID (PID) defined by the application manufacturer to identify the USB device.
The Product ID will, together with the Vendor ID, be transmitted to the host during initialization. The given Product ID must be included in the INF file needed for Windows.
Parameter is global, stored non-volatile in ME and not reset by AT&F. Setting will be active after TC65i restart.
Parameter length: maximum 4 characters.
Please note that this parameter is effective only if the customized Device Descriptor <deviceDescr>=1 is enabled.

<manufacturer>(str)(+CSCS)

Manufacturer name

Optional manufacturer string defined by the application manufacturer. If specified with <manufacturer> the same string shall be included in the INF file needed for Windows.
Parameter is global, stored non-volatile in ME and not reset by AT&F. Setting will be active after TC65i restart.
Parameter length: maximum 63 characters.
Please note that this parameter is effective only if the customized Device Descriptor <deviceDescr>=1 is enabled.

<product>(str)(+CSCS)

Product string

Optional product name defined by the application manufacturer. If specified with <product> it is recommended to include the same string into the INF file.
Parameter is global, stored non-volatile in ME and not reset by AT&F. Setting will be active after TC65i restart.
Parameter length: maximum 63 characters.
Please note that this parameter is effective only if the customized Device Descriptor <deviceDescr>=1 is enabled.

<serialNo>(str)(+CSCS)

Device's serial number

Optional serial number. Empty string if not used, like in the case of the ME'S standard USB Device Descriptor configuration.
A serial number has several advantages. For example, it enables the host to assign the same virtual COM port to same USB device even though the device is connected to another USB port. This eliminates the need for the host to load the driver again.
Parameter is global, stored non-volatile in ME and not reset by AT&F. Setting will be active after TC65i restart.
If parameter <serialNo> is not specified, the default value of ME's standard USB Device Descriptor applies.
Parameter length: maximum 63 characters.
Please note that this parameter is effective only if the customized Device Descriptor <deviceDescr>=1 is enabled.

<succ>(str)(+CSCS)

CIEV Call Status Indication

This parameter can be used to control the behaviour of URC "+CIEV: call". See also AT+CIND, AT+CMER and Section 7.1, Call Status Information.
Parameter is global for all interfaces and will not be reset by AT&F.

“restricted“(P)	URC "+CIEV: call" will be issued only when a Call Status transition ends in state "active" or "unknown" (see Section 7.1, Call Status Information) for a call in the list of active calls.
“verbose“	URC "+CIEV: call" will be issued when any state transition (including transitions beginning or ending in state "unknown") occurs in the list of active calls, or when a traffic channel is established.

<sucs>(str)(+CSCS)

SLCC Call Status Indication

This parameter can be used to control the behaviour of URC "^SLCC". See also AT^SLCC and Section 7.1, Call Status Information.
Parameter is global for all interfaces and will not be reset by AT&F.

“restricted“	URC "^SLCC" will be issued only when a Call Status transition ends in state "active" or "unknown" (see Section 7.1, Call Status Information) for a call in the list of active calls
“verbose“(P)	URC "^SLCC" will be issued when any state transition (including transitions beginning or ending in state "unknown") occurs in the list of active calls, or when a traffic channel is established.

<uri>(str)(+CSCS)

URC RING line

This parameter can be used to control the behaviour of the RING line to indicate URCs (both for idle interfaces and, if configured by the parameter "URC/Datamode/Ringline", if link is reserved) and, if configured, the indicator for incoming IP packets (see parameter "GPRS/RingOnIncomingData" (<groid>).
Parameter is local for the interface, volatile and will not be reset by AT&F.

“off“	URC is not indicated by RING.
“local“(P)	URC will be indicated by an activated RING line of the interface on which the URC appears
“asc0“	URC is indicated by an activated RING0 line.

<udri>(str)(+CSCS)

URC Datamode RING line

This parameter specifies whether RING or BREAK is used for the signaling of URCs when the TA-TE link is reserved (e.g. during circuit-switched data calls, fax connections, in GPRS data mode or during the execution of an AT command).
Parameter is global for all interfaces, volatile and will not be reset by AT&F.

“off“(P)	URC will be indicated by BREAK
“on“	URC is indicated by an active RING line for a time which is configured by the parameter "URC/Ringline/ActiveTime" (<urat>). The RING line which will be used, can be configured by the parameter "URC/Ringline" (<uri>).

<urat>(str)(+CSCS)

URC RING line Active Time

This parameter can be used to control how long the RING line is activated to indicate URCs (both for idle interfaces and, if configured by the parameter "URC/Datamode/Ringline" (<udri>), if link is reserved) and, if configured by the parameter "GPRS/RingOnIncomingData", to indicate incoming GPRS IP data packets (<groid>).
Parameter is global for all interfaces, volatile and will not be reset by AT&F.

“0“	RING line will be activated for a time between 4.6 and 9.2 ms.
“1“	RING line will be activated for about 100ms.
“2“(P)	RING line will be activated for about 1s.

<ua>(str)(+CSCS)

Userware Autostart

Specifies if the userware is started automatically on power-up.
If autostart is enabled, it is no longer possible to use the multiplexer (see AT+CMUX).
If the Java application starts, all current calls will be terminated.
The Userware/Autostart mechanism takes effect also in Airplane modeand CHARGE-ONLY-MODE.
Parameter is global, stored non-volatile in ME and not reset by AT&F.

“0“(D)	Userware autostart disabled
“1“	Userware autostart enabled

<uaa>(str)(+CSCS)

Userware Autostart AppName

Specifies the absolute path of the userware (the jar/jad file containing the desired application) to be started automatically on power-up. The local flash file system is identified by: "A:", directory separator is "/" (002Fh). The underline character "_" (005Fh) will not be supported.
Parameter is global, stored non-volatile in ME and not reset by AT&F.
Parameter length: maximum 100 characters.

<uad>(str)(+CSCS)

Userware Autostart Delay

0(D)...10000	Specifies the delay time (in 100ms) when the userware is started automatically after power-up. Parameter is global, stored non-volatile in ME and not reset by AT&F.

<upwd>(str)(+CSCS)

Userware Password

Password used to change values of userware parameters.
Parameter is global, stored non-volatile in ME and not reset by AT&F.
The maximum length of a given password is 8 characters. It is allowed to have an empty password (this is the value on delivery of the module).
CAUTION: Be careful not to lose the password. There is no way to reset or recover a forgotten password or to obtain a new password from the manufacturer.

<udbgif1>(str)(+CSCS)

Userware Debug Interface Local IP address

Local IP address of the module used by the userware debugger.
Parameter is global, volatile and not reset by AT&F.

<udbgif2>(str)(+CSCS)

Userware Debug Interface Remote IP address

IP address of the host running the userware debugger.
Parameter is global, volatile and not reset by AT&F.

<udbgif3>(str)(+CSCS)

Default interface flag for IP connections

Flag to select if the userware debug interface is the default interface for IP connections. Parameter is global, volatile and not reset by AT&F.

["0"]	Debug interface is not the default.
"1"	Debug interface is default for IP connections.

<umode>(str)(+CSCS)

Userware Mode

Parameter is global, volatile and not reset by AT&F.

["normal"]	Userware is started by AT command or autostart option.
"debug"	Userware is started by debugger on host side.
"test"	Userware is loaded from test server.

<uurl>(str)(+CSCS)

Userware Mode: Location

Use of parameter depends on selected userware mode.
Parameter is global, volatile and not reset by AT&F.
If <umode>= "normal": Parameter is ignored.
If <umode>= "debug": File name of application stored on module. Maximum length: 126 characters.
If <umode>= "test": URL of the test server. Maximum length: 126 characters.

<uport>(str)(+CSCS)

Userware Mode: Port

Use of parameter depends on selected userware mode.
Parameter is global, volatile and not reset by AT&F.

0...65535	If <umode>= "normal": Parameter is ignored. If <umode>= "debug": Port number used by debugger. If <umode>= "test": Port number of the test server.

<if>(str)(+CSCS)

Interface for Java System.out

This parameter specifies the interface to be used for the Java standard output System.out. The selected interface must be supported by the hardware.

"ASC0"	System.out is routed to the first serial interface. The interface is shared between Java CommConnection and System.out. The baud rate set for CommConnection applies also to System.out. The value is global, stored non-volatile in ME and is not reset by AT&F.
"ASC1"(D)	System.out is routed to the second serial interface. The interface is shared between Java CommConnection and System.out. The baud rate set for CommConnection applies also to System.out. The value is global, stored non-volatile in ME and is not reset by AT&F.
"USB"	System.out is routed to the Universal Serial Bus interface.

“NULL“	Discard data. The value is global, stored non-volatile in ME and is not reset by AT&F.
“UDP“	System.out is routed to a UDP socket. The parameter requires that the port number be given with <intvalue>. "UDP" is intended only for use with the Java IDE and will be set automatically each time you start the debugging emulator of the TC65i (on-device debugging). Closing the debugger causes the ME to reboot and automatically resets the <if> value last selected. This eliminates any need for manually setting "UDP" with AT^SCFG, and, besides, allows you to select another System.out target to be used when not debugging. Due to this, the value "UDP" is volatile unlike all other <if> values, and switching to "UDP" is not supported while Java is running.
“FILE“	System.out is written into a file. Requires additional parameters <intvalue>, <filename> and <logmode>. Because excessive writing to the ME's flash file system decreases the life time of the flash memory, we recommend using the "FILE" interface only during development phases. The value is global, stored non-volatile in ME and is not reset by AT&F.

<intvalue>(str)(+CSCS)

This parameter is required only if parameter <if> for the Java System.out is set to "UDP" or "FILE". Parameter is global, stored non-volatile in ME and not reset by AT&F.

1...65535	If <if>= "UDP": UDP port number. It is recommended to use a number greater than 1023. If <if>= "FILE": Size of the log file in bytes, values less then 1024 are not supported.

<filename>(str)(+CSCS)

This parameter is required only if parameter <if> for the Java System.out is set to "FILE". It specifies the absolute path and the file name of the log. The local Flash File system is identified by: "A:", directory separator is "/" (002Fh).
The underline character "_" (005Fh) is not supported.
The log is split into two concatenated files, each using half of the entire log size set with parameter <intvalue>. Each file name consists of the name specified with parameter <filename> and the numeric extension "0" or "1" automatically appended, for example "a:/java/log.txt.0" for the first part of the log and "a:/java/log.txt.1" for the second part. When the first log file reaches half of the log size, the System.out is written to the second file. When the second file is used up, the ME starts to overwrite the first one.
Parameter is global, stored non-volatile in ME and not reset by AT&F.
Parameter length: maximum 125 characters.

<logmode>(str)(+CSCS)

This parameter is required only if parameter <if> for the Java System.out is set to "FILE". The parameter selects the mode of writing System.out data to file.
Parameter is global, stored non-volatile in ME and not reset by AT&F.

“buffered“(D)	Uses a buffer and a timer and acts like a write cache.
“secure“	Writes all output data byte by byte to the file.

<wd>(str)(+CSCS)

Watchdog configuration and control

This parameter is used to configure the watchdog behaviour.
The use of the watchdog setting does not take care about network registration, file system operation and other ongoing actions (hard reset).
Parameter is global for all interfaces, non volatile and will not be reset by AT&F.

“0“(D)	Watchdog "do nothing". The watchdog has no affect.

“1“	Watchdog "re-start". The watchdog reboot the system.
“2“	Watchdog "shutdown". The watchdog switch off the system.

Notes

- Any changes to parameters of the Autoexec function will be saved and restored on next power-up only when the ME is switched off via AT commands (e.g. AT+CFUN or AT^SMSO).
- Please keep in mind, that each time the ME is restarted the timers of all autoexec actions configured with <AutoExecType>=1 and <AutoExecPeriod> will be reinitialized and restarted. As a result, an autoexec action configured at a time later then a scheduled automatic restart would never be executed.
- Be careful using <AutoExecType>=1 with small period values and shutdown or reset AT commands, since only little time remains to change these settings again after TC65i restart.
- If <AutoExecATC> uses AT commands containing secret data, this information may be retrieved with AT^SCFG?. For instance, this applies if using AT+CPIN.
- Parameters "GPRS/ATS0/withAttach" (<gs0aa>) and "GPRS/RingOnIncomingData" (<groid>) are available only for modules supporting GPRS.

Examples

EXAMPLE 1

Usage of "AutoExec":
Enable sending of a short message (SMS) on next DTR activation (OFF-ON transition). Sent SMS is assumed to be stored at first location of storage selected with AT+CPMS and AT^SSMSS, i.e. SMS may be sent either from SIM or ME storage.
Also refer to AT+CMSS and AT+CMGW. Since SMS transmission and ongoing calls are possible at the same time there is no need to wait until all calls have ended (<AutoExecMode>=0).

```
AT+CMGF=1                                   Enable SMS text mode.
OK
AT+CNMI=1,1                                 Enable "+CMTI:" URC to be indicated when a short
                                            message is received.
OK
AT+CMGD=1                                   Delete first SMS location.
OK
AT+CMGW="01522400045",145                   Start writing a short message.
>Test-SMS to be sent from storage!          Enter the text of the message. Finish with CTRL-Z.
+CMGW: 1                                    Confirms that message is stored to first location.
OK
AT^SCFG="AutoExec",1,0,0,0,"AT+CMSS=1"      Enable execution on next DTR activation.
^SCFG: "AutoExec","1","0","0","0","at+cmss=1"
^SCFG: "AutoExec","0","1","0","0","","000:00:00","000:00:00"
^SCFG: "AutoExec","0","1","1","0","","000:00:00","000:00:00"
^SCFG: "AutoExec","0","1","2","0","","000:00:00","000:00:00"
OK
```

If a DTR activation has occured the ME issues the URC "^SCFG: " followed by the response of the executed command; the message reference in this case:

```
^SCFG:"AutoExec",0,0,1,0,"AT+CMSS=1"
OK                                          Confirms that AT+CMSS=1 has been issued.
+CMSS: 16
```

EXAMPLE 2

Usage of "AutoExec":
Configure TC65i to perform a reset every 10 hours. The execution of the reset command shall be deferred until after any calls have ended.
For details regarding software controlled power down refer to AT+CFUN and AT^SMSO.

```
AT^SCFG="AutoExec",1,1,2,5,"AT+CFUN=0,1","010:00:00"
```

```
...
OK
```

After ten hours:

```
^SCFG:"AutoExec",1,1,2,5,"AT+CFUN=0,1"
OK                                          Confirms that AT+CFUN=0,1 has been issued.
SYSSTART                                    TC65i has restarted. Remember that the
                                            "^SYSSTART" URC will not appear if autobauding is
                                            enabled.
```

EXAMPLE 3

Usage of "AutoExec":
Switch off the ME after three minutes without restarting it.
For details regarding software controlled power down refer to AT+CFUN and AT^SMSO.
Please keep in mind that if the GSM alphabet is enabled special characters within the executed AT command shall be issued as escape sequences. A list of typical escape sequences can be found in Section 1.6.1, GSM alphabet tables and UCS2 character values. For example, the caret character "^" included in all proprietary AT commands shall be given as "\1B\14".

```
AT^SCFG="AutoExec",1,1,0,0,"AT\1B\14SMSO","000:03:00"
^SCFG: "AutoExec","0","0","0","0",""
^SCFG:                                      Please note that the indication of the escape
"AutoExec","1","1","0","0","ATSMSO","000:   sequence in the write command response depends
03:00","000:02:59"                          on the used program.
^SCFG: "AutoExec","0","1","1","0","","000:00:00","000:00:00"
^SCFG: "AutoExec","0","1","2","0","","000:00:00","000:00:00"
OK
```

After three minutes:

```
^SCFG:"AutoExec",0,1,1,0,"AT^SMSO"
^SMSO: MS OFF
OK
^SHUTDOWN                                   Indicates that AT^SMSO was successfully executed.
                                            The ME enters the POWER DOWN mode.
```

EXAMPLE 4

Usage of "AutoExec":
Deactivate a timer-driven Autoexec function configured at <AutoExecIndex> 2 (such as the periodic automatic reset or the automatic switch-off functions configured in the preceding examples):

```
AT^SCFG="AutoExec",0,1,2
...
OK
```

EXAMPLE 5

Usage of "URC/Ringline" and "URC/Datamode/Ringline":

```
AT+CSCS="GSM"                               Switch to GSM character set.
OK
AT^SCFG?                                    Query all parameters.
...
^SCFG:"URC/Datamode/Ringline","off"         While the TA-TE link is reserved URCs will be indi-
                                            cated by BREAK.
^SCFG:"URC/Ringline","local"                URCs on this interface will be indicated by Ring line
                                            associated to the interface (e.g. RING0 for ASC0).
...
OK
AT^SCFG="URC/Datamode/Ringline","on"
^SCFG:"URC/Datamode/Ringline","on"          While the TA-TE link is reserved URCs will be indi-
                                            cated by an activated "local" Ring line.
OK
AT^SCFG="URC/Ringline","asc0"
```

^SCFG:"URC/Ringline","asc0" OK AT^SCFG="URC/Datamode/Ringline","off" ^SCFG:"URC/Datamode/Ringline","off" OK AT^SCFG="URC/Ringline" ^SCFG:"URC/Ringline","off" OK	URCs on *this* interface will be indicated by an activated RING0 no matter whether or not the TA-TE link is reserved. URCs on *this* interface will be indicated by an activated RING0 if the TA-TE link is *not* reserved and by BREAK if the TA-TE link is reserved. Disable any Ring line indication for URCs on this interface.

2.15 AT^SM20 Set M20 compatibility mode

M20 is an earlier, widely used GSM engine. The AT^SM20 command selects different modes of responses returned upon execution of the commands ATD and sms commands like e.g. AT+CMGW. Please note that the AT^SM20 command has no effect on any other features and is not intended to adjust other differences between M20 and TC65i.

Syntax

Test Command
AT^SM20=?
Response(s)
OK

Read Command
AT^SM20?
Response(s)
^SM20:<CallMode>, <CmgwMode> OK

Write Command
AT^SM20=<CallMode>[, <CmgwMode>]
Response(s)
OK

PIN	ASC0	ASC1	USB	MUX1	MUX2	MUX3	Charge	✈	Last
-	+	+	+	+	+	+	-	-	-

Parameter Description

<CallMode>(num)

Call setup response mode

Applies only to voice calls.

0	Set compatibility to Cinterion Wireless Modules. ME will return "OK" immediately after attempting a call with the ATD command. In case of failure, additional call release indications, such as "NO DIAL TONE, "NO CARRIER", "BUSY" will follow.
1(&F)	Default call setup mode, compatible to M20. ME will return "OK" in case of a successful connection, otherwise one of the call release indications "NO DIAL TONE, "NO CARRIER", "BUSY" are indicated.

<CmgwMode>(num)

Response mode for sending and writing short messages

Applies to the sms commands like e.g. AT+CMGS and AT+CMGW command.

0	Set compatibility to Cinterion Wireless Modules. ME will return +CMS ERROR: <err> when writing or sending of short messages fails.
1(&F)	Default mode for sending and writing short messages, compatible to M20. ME will return "OK", no matter whether or not sms command was successfully executed.

3. Status Control Commands

The AT Commands described in this chapter allow the external application to obtain various status information from the TC65i.

3.1 AT+CMER Mobile Equipment Event Reporting

This command controls details of the "+CIEV" URC presentation related to AT^SIND and AT+CIND. If registered via these commands the URCs are sent whenever a value of the related indicator changes.
In addition, AT+CMER controls "^SLCC" URCs related to AT^SLCC. For details refer to Call Status Information, AT^SLCC and AT^SCFG, parameter <sucs>.
The read command returns the URC presentation mode <mode> and among others, the indicator event reporting status <ind>.
The write command enables and disables the presentation of "+CIEV: <indDescr>, <indValue>$_1$[, <indValue>$_2$]" URCs. <indDescr> refers to the name of a "+CIEV" indicator and <indValue> is the new value of this indicator. After AT+CMER has been switched on, URCs for all registered indicators will be issued. See examples provided in Section 3.2, AT+CIND and Section 3.3, AT^SIND.

Syntax

Test Command

AT+CMER=?

Response(s)

+CMER: (list of supported<mode>s), (list of supported <keyp>s), (list of supported <disp>s), (list of supported <ind>s), (list of supported <bfr>s)
OK

Read Command

AT+CMER?

Response(s)

+CMER: <mode>, <keyp>, <disp>, <ind>, <bfr>
OK

Write Command

AT+CMER=[<mode>[, <keyp>[, <disp>[, <ind>[, <bfr>]]]]]

Response(s)

OK
ERROR
+CME ERROR: <err>

PIN	ASC0	ASC1	USB	MUX1	MUX2	MUX3	Charge	✈	Last
-	+	+	+	+	+	+	-	+	-

Reference(s)

GSM 07.07

Unsolicited Result Code

+CIEV: <indDescr>, <indValue>$_1$[, <indValue>$_2$]
A value of an indicator has changed.

Parameter Description

<mode>(num)	
0(&F)	Discard "+CIEV" and "^SLCC" URCs.
1	Discard "+CIEV" and "^SLCC" URCs when TA-TE link is reserved, e.g. in online data mode. Otherwise they are forwarded directly to the TE.
2	Buffer "+CIEV" and "^SLCC" URCs in the TA while TA-TE link is reserved, e.g. in online data mode, and flush them to the TE afterwards. Otherwise they are forwarded directly to the TE.
3	Forward "+CIEV" and "^SLCC" URCs directly to the TE. If TC65i is in online data mode, URCs are signaled via sending BREAK and stored in a buffer. Once it is back in command mode e.g. after +++ was entered, all URCs stored in the buffer will be output.

<keyp>(num)	
0(&F)	Keypad event reporting is not supported by TC65i.

<disp>(num)	
0(&F)	Display event reporting is not supported by TC65i.

<ind>(num)	
0(&F)	Disable indicator event reporting.
2	Enable indicator event reporting.

<bfr>(num)	
0(&F)	TA buffer of URCs defined within this command is cleared when <mode> 1..3 is entered.

<indDescr>(str)

Name of indicator; for a list of all supported indicators please refer to AT+CIND and AT^SIND.

<indValue>(num)

Value of indicator; for a list of all values for the supported indicators please refer to AT+CIND and AT^SIND.

Notes

- If the ME operates on different instances (MUX channels 1, 2, 3 or ASC0/ASC1) avoid different settings for routing and indicating SMS. For example, if messages shall be routed directly to one instance of the TE (set with AT+CNMI, AT^SSDA), it is not possible to activate the presentation of URCs with AT+CMER or AT+CNMI on another instance. Any attempt to activate settings that conflict with existing settings on another interface, will result in "+CME ERROR", or accordingly "+CMS ERROR".
- It is recommended that priority be given to AT+CMER=<mode> 2 or 3. Otherwise, if <mode> equals 1, URCs will be discarded in case of long running AT commands or an active data connection.
- If <mode> equals 3, URCs are signaled via sending BREAK only on ASC0 or ASC1.

3.2 AT+CIND Indicator control

The AT+CIND command controls the presentation of Indicator Event Reports related to various functions such as battery charge level, signal quality, service availability, sound generation, indication of unread short messages, full SMS storage, call in progress or roaming activities.
Use of AT+CIND has become outdated. Rather we recommend the more powerful AT^SIND command which is easier to use and provides additional indicators. All indicators provided by AT+CIND can be handled with AT^SIND as well.

AT+CIND supports two ways to get the values related to indicators:

- One approach is to query the current status of each indicator by using the read command AT+CIND?. It returns the status no matter whether the indicator has been registered with the write command AT+CIND=[<mode>[,<mode>[,...]]].
- The other way is an event-driven notification based on the "+CIEV" URCs. In this case, the ME will automatically send a message to the application, whenever the value of an indicator changes. The application should be designed to react adequately when receiving a URC.
  The presentation of these URCs depends on two settings:
  - The indicators must be registered with the write command AT+CIND=[<mode>[,<mode>[,...]]]. When the ME is switched on all of them are in registered mode. Any indicator can be excluded if deregistered with <mode>=0. To register or deregister an indicator the AT+CIND write command requires to type the value <mode>=1 or 0 exactly at the position where the indicator is located in the list. This is not necessary with AT^SIND which allows to specify indicators by name. See examples below.
  - The presentation of the registered indicators must be enabled with AT+CMER.

Syntax

Test Command

```
AT+CIND=?
```

Response(s)

```
+CIND: (<indDescr>, list of supported <indValue>s)[, (<indDescr>, list of supported <indValue>s)[, ...]]
OK
```

Read Command

```
AT+CIND?
```

Response(s)

```
+CIND: <indValue>[, <indValue>[, ...]]
OK
ERROR
+CME ERROR: <err>
```

Write Command

```
AT+CIND=<mode>[, <mode>[, ...]]
```

Response(s)

```
OK
ERROR
+CME ERROR: <err>
```

PIN	ASC0	ASC1	USB	MUX1	MUX2	MUX3	Charge	✈	Last
-	+	+	+	+	+	+	-	+	-

Reference(s)

GSM 07.07

Parameter Description

<indValue>(num)

Integer type value, which shall be in range of corresponding <indDescr>

<indDescr>(str)	
String values and their <indValue> ranges. More indications are available via AT^SIND. Therefore use of AT^SIND for control of all indications is recommended. The following indications are accessible via AT+CIND:	
“battchg“	Battery charge level 0..4 or 5 if no measuring is performed, e.g because no battery is connected. Also refer to AT^SBC.
“signal“	Signal quality (0..7) or (99) if not measurable The indicated value is the bit error rate of the signal received. Bit errors are estimated values. See also AT+CSQ.
“service“	Service availability (0-1) 0: Not registered to any network 1: Registered to home network or, if "roam"=1 then registered to another network
“sounder“	Sounder activity (0-1) Reports every event that causes the ME to generate a tone. Value 1 means for example: Incoming call - ME is ringing. Note that the URC "+CIEV: sounder" will be output only if ringing tones are activated with AT^SRTC. Waiting call - ME generates waiting call tone (if call waiting is enabled). Outgoing call - ME generates Call Progress tone. Outgoing call - ME generates BUSY tone. The value changes to 0 when the tone stops.
“message“	Unread short message at memory location <mem1> (0-1); refer to AT+CPMS
“call“	Call in progress (0-1). Indicator value is "1" if at least one call is in state "active" or "held". Depending on the parameter <succ> selected with AT^SCFG the indicator "call" will be issued • when a state transition ends in state "active" or state "unknown", if <succ>="restricted", • when any state transition (including transitions beginning or ending in state "unknown") occurs in the list of active calls or when a traffic channel is established, if <succ>="verbose". Also refer to Section 7.1, Call Status Information.
“roam“	Roaming indicator (0-1) 0: Registered to home network or not registered 1: Registered to other network
“smsfull“	A short message memory storage in the MT has become full (1) or memory locations are available (0), i.e. range is (0-1)
“rssi“	Received signal (field) strength (0..5) 0: signal strength ≤ -112 dBm 1-4: signal strength in 15 dB steps 5: signal strength ≥ -51 dBm 99: not known or not detectable Received signal (field) strength can also be obtained with AT+CSQ. However, the signal strength is scaled to value range 0..31 by this command.

<mode>(num)	
0	Indicator is deregistered. The indicator will not be presented as "+CIEV" URC, but can be queried with AT+CIND?.
[1](&F)(P)	Indicator is registered, indicator event report allowed.

Notes

- Due to its restrictive value range, indicator "call" does not clearly reflect specific call states (such as alerting, active, held etc.), but rather serves to trigger the application to retrieve the new call status from the list of current calls with the AT commands AT^SLCC, AT+CLCC or AT^SCNI.
- If AT^SCFG setting <succ>="verbose", indicator "call" will be issued also when a traffic channel is established, or when a call enters states "terminating" or "dropped" (see Call Status Information).
  In these cases, the relevant information about the cause of the display is available only from AT command AT^SLCC.

Examples

EXAMPLE 1

^SYSSTART	
AT+CPIN=9999	
OK	
AT+CIND?	
+CIND: 5,0,1,0,0,0,0,0	The battery is either full or no battery is connected to the ME. The bit error rate of the signal quality is not available (since there is no call in progress). The ME is registered to its home network.
OK	
AT+CMER=2,0,0,2	Now activate the Indicator Event Report with AT+CMER.
OK	
+CIEV: battchg,5	
+CIEV: signal,0	
+CIEV: service,1	
+CIEV: sounder,0	
+CIEV: message,0	
+CIEV: call,0	
+CIEV: roam,0	
+CIEV: smsfull,0	
+CIEV: rssi,5	Full receive signal strength.
ATD0123456;	Make a call.
OK	
+CIEV: sounder,1	A set of "+CIEV" URCs is received.
+CIEV: call,1	
+CIEV: sounder,0	
+CIEV: call,0	Called party hangs up.
NO CARRIER	
AT+CIND=,,,0,,0	Deregister the indicators "sounder" and "call".
OK	
ATD0123456;	Dial the same call.
OK	This time, no URCs are displayed.
NO CARRIER	Called party hangs up.

EXAMPLE 2

Deactivation of indicator "sounder" via AT+CIND

AT+CIND?	Query the current status of indicators.
+CIND: 5,0,1,0,1,0,0,0,4	
OK	
AT+CIND=,,,0	To deactivate indicator "sounder" (= fourth item in list of indicators).
OK	

EXAMPLE 3

Deactivation of indicator "sounder" via AT^SIND

AT^SIND="sounder",0	To deactivate indicator "sounder".
^SIND: sounder,0,0	
OK	

3.3 AT^SIND Extended Indicator Control

Designed for extended event indicator control AT^SIND

- offers greater flexibility than the standard command AT+CIND,
- offers several extra indicators,
- can show the current status of all indicators supported by AT+CIND and AT^SIND,
- can be used to register or deregister the indicators of both commands,
- displays all indicator event reports via "+CIEV" URCs.

Presentation mode of the generated URCs is controlled via AT+CMER.

The AT^SIND read command provides a list of all indicators supported by AT+CIND and AT^SIND. Each indicator is represented with its registration mode and current value.
The AT^SIND write command can be used to select a single indicator in order to modify its registration and to view the current value.

Syntax

Test Command

```
AT^SIND=?
```

Response(s)

```
^SIND: (<indDescr>, list of supported <indValue>s)[, (<indDescr>, list of supported <indValue>s)[, ...]], (list of supported <mode>s)
OK
```

Read Command

```
AT^SIND?
```

Response(s)

```
^SIND: <indDescr>, <mode>, <indValue>
[^SIND: <indDescr>, <mode>, <indValue>]
...

In case of <indDescr>="eons"
^SIND: "eons", <mode>, <eonsOperator>, <servProvider>

In case of <indDescr>="nitz"
^SIND: "nitz", <mode>, <nitzUT>, <nitzTZ>, <nitzDST>

In case of <indDescr>="lsta"
^SIND: "lsta", <mode>, <lstaLevel>
OK
ERROR
+CME ERROR: <err>
```

Write Command

```
AT^SIND=<indDescr>, <mode>
```

Response(s)

```
^SIND: <indDescr>, <mode>, <indValue>

In case of: <indDescr>="eons" and <mode>=2
^SIND: "eons", <mode>, <indValue>, <eonsOperator>, <servProvider>

In case of: <indDescr>="nitz" and <mode>=2
^SIND: "nitz", <mode>, <nitzUT>, <nitzTZ>, <nitzDST>
OK
```

Write Command (Continued)
AT^SIND=<indDescr>, <mode>
Response(s)
ERROR +CME ERROR: <err>

Write Command
AT^SIND="lsta", <mode>[, <lstaLevel>]
Response(s)
^SIND: "lsta", <mode>[, <lstaLevel>] OK ERROR +CME ERROR: <err>

PIN	ASC0	ASC1	USB	MUX1	MUX2	MUX3	Charge	✈	Last
-	+	+	+	+	+	+	-	+	-

Unsolicited Result Codes

URC 1

Format of the standard indicator:

+CIEV: <indDescr>, <indValue>

Value related to an indicator has changed.

URC 2

Format of the "adnread" indicator issued when accessing the ADN phonebook records stored on the SIM:

+CIEV: <indDescr>, <adnEntry>, <adnNumber>, <adnType>, <adnText>
+CIEV: <indDescr>, "READY"

One URC is issued for every used Abbreviated Dialing Number (ADN) phonebook record. After the last record of the ADN phonebook was read, a URC with "READY" tag signals end of processing.

URC 3

Format of the Voice Message indicator, if the number of waiting messages is delivered by the network:

+CIEV: <indDescr>, <indValue>, <vmCounter>

If the number of waiting messages is not delivered the standard indicator applies.

URC 4

Format of the "eons" indicator:

+CIEV: <indDescr>, <indValue>, <eonsOperator>, <servProvider>

One URC is issued for each new LAI (Location Area Information) broadcast by the network.

URC 5

Format of the "nitz" indicator:

+CIEV: <indDescr>, <nitzUT>, <nitzTZ>, <nitzDST>

URC 6

Format of the "lsta" indicator:
In case <indValue> equals "0".

+CIEV: <indDescr>, <indValue>, <lstaEdv>, <lstaRssi>

The URC is issued for every radio link error. It provides the error downcounter value corresponding to number of consecutive errors on downlink and the RSSI of the serving cell.
Error downcounter value of 10 corresponds to first error occurred on downlink, 0 corresponds to last before cell loss.

URC 7

In case <indValue> equals "1".

+CIEV: <indDescr>, <indValue>, <lstaNo>, <lstaMax>, <lstaMin>, <lstaMean>, <lstaVar>

After the error downcounter reaches the value 0 the URC provides some statistic parameters of signal strength distribution across the band.

Parameter Description

<indDescr>(str)

String values and their <indValue> ranges.
All indicators supported by AT+CIND are accessible with this command, too. A detailed description of these indicators can be found there.
The following indicators are accessible via AT^SIND only:

“audio“	Activity of the built-in audio unit. 0 Audio unit not active. 1 Audio unit is active, for example: MO voice call: Indicator is output with value 1 when dialing starts. MT voice call: Indicator is output with value 1 when call is ringing.
“vmwait1“	Voice Message Waiting Indication for line 1 0 The value 0 notifies that no new voice message is available, and is provided by the service center to clear the voice message indication after the subscriber has retrieved all voice messages. 1 The value 1 notifies the subscriber that the mailbox contains one or several messages. "vmwait1" and "vmwait2" indicate the receipt of a special short message with a Voice Message Waiting Indicator. The service must be provisioned by the operator. The numbers 1 or 2 in "vmwait1" and "vmwait2" are related to the two lines of the Alternate Line Service (ALS), also defined in CPHS Phase 2 standard. For further details refer to the AT^SALS command. The presentation mode of the indicator varies with the operator: If more than one message are waiting, some operators only indicate the first one, others deliver the indicator each time a new voice message is put into the mailbox. After the subscriber has retrieved all voice messages the service center automatically sends another message indication which provides the value 0. Some operators may also send the number of waiting voice messages along with the indication. In this case, the number will be displayed by the TC65i as part of the URC. For example, "+CIEV: vmwait1,1,5" notifies that five new voice messages are waiting. However, it should be noted that neither the read command AT^SIND? nor the write command AT^SIND=<mode>,2 display the number of waiting messages. The "vmwait" indicators do not apply if a network provider signals new voice mail(s) via standard SMS. In this case the indicator "message" will be displayed (see AT+CIND).
“vmwait2“	Voice Message Waiting Indication for line 2 0 See description of "vmwait1". 1 See description of "vmwait1".
“ciphcall“	Ciphering Status Change Indication 0 Current call or SMS is not ciphered. 1 Current call or SMS is ciphered. As stated in GSM specifications 02.07 and 02.09 the ciphering indicator feature allows the TC65i to detect that ciphering is not switched on and to indicate this to the user. The ciphering indicator feature may be disabled by the home network operator setting data in the "administrative data" field (EF_{AD}) in the SIM, as defined in GSM 11.11.

If this feature is not disabled by the SIM, then whenever a connection is in place, which is, or becomes unenciphered, an indication shall be given to the user. This enables the user's decision how to proceed.
Read command returns valid ciphering status only if a call is in progress or active.
If EF_{AD} setting disables the ciphering indicator feature read command always indicates a ciphered link and no URC presentaion will take place.
The following restrictions apply if the same serial channel is used for AT^SIND "ciphcall" indication and for the action triggering this URC. In general, the recommended solution is to use a dedicated channel for all status signalling via URCs.

- If an unciphered mobile originated SMS is performed, AT^SIND "ciphcall" URCs on the same serial channel will be issued after the related "OK" and indicate the ciphering state at *this* time.
- If an unciphered mobile originated data call is performed, AT^SIND "ciphcall" URCs on the same serial channel will be issued after the interface is not longer blocked by the call (call is released or temporarily stopped) and indicate the ciphering state at *this* time.

“adnread“

Abbreviated Dialing Number (ADN) Phonebook Read Indication
0 Phonebook reading is not finished.
1 Phonebook reading is finished.
Every time after entering the AT+CPIN the module starts reading the ADN phonebook. This can be used to enable the TE to output the phonebook records as URCs. The advantage is that the user does not need to wait until the phonebook read command AT+CPBR is accessible after entering the SIM PIN (depending on the SIM card this may take up to 30 seconds).
If <mode>=1 all used ADN phonebook records stored on the SIM will be output as URCs after SIM PIN authentication has been performed successfully. A URC with "READY" tag issued at the end of the list indicates that TC65i has finished reading the phonebook.
Note that the settings of AT^SIND and AT+CMER will be restored to their default values when restarting the TC65i. Therefore it is recommended that the settings be enabled before entering the SIM PIN. This can be done, for example, after rebooting the TC65i.

“eons“

Enhanced Operator Name String (EONS) Indication
The Enhanced Operator Name String indicator feature allows the TC65i to output various operator names for different PLMN identities via URC. It also allows the output of a different operator name based on a subset of the registered network by using a range of Location Area Codes (LACs) or a single LAC.
The presentation of the "eons" indicator is determined by network activity. For example, the indicator appears every time a location update occurs or a NITZ information is sent, no matter whether or not the status of the EONS information has changed. This means that the same EONS information may be reported several times.
The EONS tables are stored in the SIM card and will be read at power-up.
Following are the SIM Elementary Files that are affected by the introduction of EONS feature in the SIM card:
EF_{SST} (SIM Service Table) - describes which features are active.
EF_{OPL} (Operator PLMN List) - contains the PLMN identification and location ID together with the index of the corresponding PNN record
EF_{PNN} (PLMN Network Name) - contains the full and short form version of the network name for the registered PLMN
If the Operator Name Source is CPHS Operator Name String long and short form, refer to <indValue>, the following two SIM Elementary Files will be used:
$EF_{ONString}$ (Operator Name String) - contains the name of the PLMN operator who issued the SIM.
$EF_{OPShort}$ (Operator Name Short form) - contains a short form of the name of the PLMN operator who issued the SIM.

“nitz“	Network Identity and Time Zone indication This indicator shows the time relevant information elements of an MM Information (MMI) or GMM Information (GMMI) message received from the network (see GSM 24.008, ch. 9.2.15a and 9.4.19). The network usually sends a NITZ indicator when the mobile attaches to the network, when it enters a location area with different time zone or when a daylight change occurs. A NITZ indicator may consist of the following parameters: Universal Time (UT), local Time Zone (TZ), Daylight Saving Time (DST). All information elements of MMI/GMMI are optional and therefore, the presentation of the parameters <nitzUT>, <nitzTZ>, <nitzDST> varies with the network. For example, the network may send all three parameters UT, TZ, DST, or only UT and TZ or only TZ. UT is indicated in usual date/time format and represents the current world time (GMT) at the moment when sent. TZ is given as a positive (east) or negative (west) offset from UT in units of 15 minutes. DST shows the number of hours added to the local TZ because of daylight saving time (summertime) adjustment. Usually DST is 1 hour but it can be also 2 hours in certain locations. Example for time and time zone with DST: +CIEV: nitz,"04/07/23,13:39:20",-28,1 In this example TZ is -28, showing a time offset of -7 hours (west) to Universal Time/GMT (which never changes for DST). DST is 1 which indicates that one hour was added to TZ because of Daylight Saving Time. If a network does not send the DST parameter the TZ value would be -32 (8 hours west) as would be done in winter: +CIEV: nitz,"04/11/23,13:39:20",-32 Please be aware that despite the last NITZ value can be looked up again via "AT^SIND=nitz,2" the returned values may be out of date. Especially the UT value is obsolete because there is no internal NITZ clock and therefore no continuation of UT. NITZ values are lost when the module detaches from network. Also when a manual network selection fails and the module automatically falls back to the previous network the NITZ values cannot be recalled. Nevertheless an indicated time zone is valid until a new MMI/GMMI will trigger another NITZ indication.
“simlocal“	SIM availability "+CIEV" URC indicates if the SIM is available. 0 SIM removed. 1 SIM inserted.
“simstatus“	SIM Status Indication The SIM Status Indicator allows to query the status of the SIM (Subscriber Identity Module). 0 SIM card removed. Note: Another way to verify the SIM card connection is the "^SCKS" URC enabled with AT^SCKS. For use after restart, its presentation mode can be stored to the user profile with AT&W. 1 SIM card inserted. 2 SIM PIN1 not required - SIM card unlocked. TC65i automatically registers to the GSM network without requesting SIM PIN1. 3 SIM PIN1 required - SIM card locked. SIM PIN1 must be entered to enable TC65i to register to the GSM network. 4 Personalization info ready - CHV (Card Holder Verification) data have been verified (if required). 5 SIM initialization completed - ME has finished reading SIM data. Note: Another way to notify the user when SIM data are accessible is the "^SSIM READY" URC enabled with AT^SSET. For use after restart, its presentation mode can be stored to the user profile with AT&W.

“band“	Currently selected frequency band or band combination. 1...15 Identical with <rbc> of AT^SCFG. The value indicates the band(s) currently available for network selection, depending on the network configuration either a single band or a dualband combination. The URC appears whenever the status of the currently available band(s) changes, for example after using the AT^SCFG command to change the "Radio/Band" parameters <rba> or <rbp>. Please see AT^SCFG for further detail about the feature "Radio/Band" selection.
“lsta“	Link Stability Indication The Link Stability indicator feature allows the TC65i to output radio link errors and statistic parameters of signal strength distribution across the band via URC. 0 Radio link error. 1 Radio link signal strength distribution. The presentation of the "lsta" indicator is determined by the radio link spectrum shape. For example, each time a radio link error appears the URC indicates an Error Downcounter value and the RSSI of the serving cell to provide some kind of warning. Every consecutive error decrements the Error Downcounter value and successful downlink signal reception resets it to start value of 10. The factor on which Error Downcounter is decremented depends on network settings. Error Downcounter value 0 means that the ME has lost the cell and will start the cell reselection process. In this case the URC is enhanced and includes the following statistic parameters of signal strength distribution across the band. These are: - Number of reported channels, - Maximal signal strength value, - Minimal signal strength value, - Mean value of signal strength across frequency band and - Variance of signal strength across frequency band. To avoid that radio link error URCs are output too often, when radio conditions are bad, you can select a lower warning level with <lstaLevel>.

<indValue>(num)

Integer type value in the range stated above for the corresponding <indDescr>.

Notes specific to the EONS feature:
If the indicator is "eons", the <indValue> is a type associated to the operator name according to GSM 22.101 [27]. This type depends on the source of the operator name.
Priority of types associated to the operator names is defined as follows (the type listed first has the highest priority). If a type cannot be indicated the next one will be used.

0	Not registered.
1	EF-OPL and EF-PNN (alphanumeric format, can contain up to 24 characters.)
2	Operator Name String in long and short format according to Common PCN Handset Specification (CPHS) [28] (alphanumeric format, can contain up to 16 characters).
3	Name information received by the NITZ service long and short form (alphanumeric format, can contain up to 16 characters). The short form will be displayed only if $EF_{OPShort}$ from CPHS is available.
4	Any operator name stored internal to the ME (alphanumeric format, can contain up to 16 characters).
5	Broadcast MCC-MNC (numeric format which consists of a 3-digit country code plus a 2- or 3-digit network code).

The name information received by the NITZ service (type 3) is stored non-volatile. It replaces the operator name of the registered PLMN (type 4) or its numeric form (type 5) stored in the ME. But if the ME, after restart, registers to another PLMN that is not equal to the saved NITZ name information, the NITZ name information must be invalidated. If the type is 2, 4 or 5, AT+COPS with the appropriate <mode> displays the same operator name.

<mode>(num)	
0	Indicator is deregistered, i.e. no such indicator event report (URC) will be issued. <mode>=0 is power-up and factory default of indicators defined by AT^SIND only.
1	Indicator is registered. • Indicator event reports are controlled via AT+CMER. • All indicators can be registered or deregistered via AT^SIND, but different default settings apply: Power-up and factory default of the indicators supported by AT+CIND is <mode>=1, while, as stated above, indicators defined by AT^SIND only are set to <mode>=0.
2	Query the registration status and the current value of a single indicator type.

<adnEntry>(num)

ADN phonebook record number on the SIM.

<adnNumber>(str)

Phone number, for further details see AT+CPBR.

<adnType>(num)

Address type, for further details see AT+CPBR.

145	Dialing string <adnNumber> includes international access code character '+'.
209	Dialing string <adnNumber> contains printable non-alphabetic non-digit characters saved with the number string.
129	otherwise

<adnText>(str)

Text assigned to a phone number. For further details see AT+CPBR.

<vmCounter>

If delivered by the network: Number of new voice messages sent as part of the Voice Message Waiting Indicator. Refer to <indDescr>.

<eonsOperator>

Operator in format which depends on the type associated to the operator name. Refer to <indValue>.

<servProvider>(str)

Service Provider Name according to the status settings (SIM Service No. 17) in the SIM Service Table (SST) of the SIM.

<nitzUT>

Universal Time delivered as part of the "nitz" Indicator. Refer to <indDescr>.

<nitzTZ>

Time Zone delivered as part of the "nitz" Indicator. Refer to <indDescr>.

<nitzDST>

Adjustment for Daylight Saving Time as part of the "nitz" Indicator. Refer to <indDescr>.

`<lstaLevel>`(num)

Warning Level (0-10)
User value to limit the indication of radio link errors. Refer to `<indDescr>`.

`<lstaEdv>`(num)

EDV (0-10)
Error Downcounter value. Refer to `<indDescr>`.

`<lstaRssi>`(num)

(value-110) dBm
Received signal strength indication value. Refer to `<indDescr>`.

`<lstaNo>`(num)

Number of reported channels. Refer to `<indDescr>`.

`<lstaMax>`(num)

(value-110) dBm
Maximal received signal strength value. Refer to `<indDescr>`.

`<lstaMin>`(num)

(value-110) dBm
Minimal received signal strength value. Refer to `<indDescr>`.

`<lstaMean>`(num)

(value-110) dBm
Mean value of received signal strength across frequency. Refer to `<indDescr>`.

`<lstaVar>`(num)

Variance of signal strength across frequency. Refer to `<indDescr>`.

Example

Activation and use of indicator "audio":

`AT^SIND="audio",1`	You register the indicator "audio".
`^SIND: audio,1,0`	
`OK`	
`AT+CMER=2,,,2`	You activate the Indicator Event Report with `AT+CMER`.
`OK`	A set of all registered URCs is presented. (Please note that the example includes the indicators registered due to the power-up default settings of `AT+CIND`.)
`+CIEV: battchg,5`	
`+CIEV: signal,0`	
`+CIEV: service,1`	
`+CIEV: sounder,0`	
`+CIEV: message,1`	
`+CIEV: call,0`	
`+CIEV: roam,0`	
`+CIEV: smsfull,0`	
`+CIEV: rssi,4`	
`+CIEV: audio,0`	

ATD030123456	You make a call.
OK	
+CIEV: audio,1	
+CIEV: sounder,1	
+CIEV: call,1	
+CIEV: signal,0	
+CIEV: sounder,0	
ATH	You hang up.
OK	
+CIEV: call,0	
+CIEV: rssi,3	
+CIEV: audio,0	
+CIEV: signal,0	
+CIEV: rssi,4	

3.4 AT+CEER Extended Error Report

AT+CEER returns an extended error report regarding the reason of the last

- call release
- failure to set up a call (both mobile originated or terminated)
- failure to modify a call by using Supplementary Services
- failed attempt to activate, register, query, deactivate or deregister a Supplementary Service
- unsuccessful GPRS attach or unsuccessful PDP context activation
- GPRS detach or PDP context deactivation

The release cause report is presented in numeric format. Default output in case of a none-error-situation is +CEER: 0,0,0. A description associated with each number can be found in the tables given in the following subclauses and the relevant GSM specifications.
The first parameter <locationID> serves to locate the other two parameters. Depending on the failure or release cause either <reason> or <ssRelease> are applicable, i.e. if <reason> ≠ 0, then <ssRelease> = 0. Vice versa, if <reason> = 0, then <ssRelease> may be ≠ 0.
In addition to AT+CEER, the command ATS18 can be used to check especially the status of fax and data calls.

Syntax

Test Command

```
AT+CEER=?
```

Response(s)

```
OK
ERROR
+CME ERROR: <err>
```

Exec Command

```
AT+CEER
```

Response(s)

```
+CEER: <locationID>, <reason>, <ssRelease>
OK
ERROR
+CME ERROR: <err>
```

PIN	ASC0	ASC1	USB	MUX1	MUX2	MUX3	Charge	✈	Last
+	+	+	+	+	+	+	-	+	-

Reference(s)

GSM 07.07

Parameter Description

<locationID>(num)

Location ID as number code. Location IDs are listed in Section 3.4.1, Cause Location ID for the extended error report. Each ID is related with another table that contains a list of <reason>s or <ssRelease>s.

<reason>(num)

Reason for last call release as number code. The number codes are listed in several tables, sorted by different categories in the following subclauses. The tables can be found proceeding from the Location ID given in Section 3.4.1, Cause Location ID for the extended error report.

<ssRelease>(num)

Release cause for last Supplementary Service call (listed in Section 3.4.9, GSM Release cause for Supplementary Service Call)

Examples

EXAMPLE 1

`ATD"01751223344";`	A mobile originated call is rejected by the remote party.
`NO CARRIER`	Call setup is terminated with NO CARRIER.
`AT+CEER`	To check the cause, the caller enters AT+CEER.
`+CEER: 8,21,0`	The Location ID 8 in Section 3.4.1 points to Section 3.4.7, where 21 = "call rejected". 0 = "no error" refers to parameter `<ssRelease>` that is not applicable.
`OK`	

EXAMPLE 2

The user attempts to activate call barring, but uses a wrong password.

`AT+clck=oi,1,"0000",3`	
`+CME ERROR: incorrect password`	
`AT+CEER`	
`+CEER: 35,0,38`	The Location ID 35 in Section 3.4.1 points to Section 3.4.9, where 38 = "negative PW check" may mean that a wrong password was tried for the first time. 0 = "no error" refers to parameter `<reason>` that is not applicable.
`OK`	

3.4.1 Cause Location ID for the extended error report

ID	Description
0	no error (default)
1	Proprietary L2 cause
2	GSM cause for L3 radio resource sublayer (GSM 04.08 annex F)
3	Proprietary cause for L3 radio resource sublayer
4	GSM cause for L3 mobility management (GSM 04.08 annex G)
5	Proprietary cause for L3 mobility management
6	GSM cause for L3 mobility management via MMR-SAP (GSM 04.08 annex G)
8	GSM cause for L3 call control (GSM 04.08 10.5.4.11 and annex H)
9	Proprietary cause for L3 call control
12	GSM cause for L3 SMS CP entity
13	Proprietary cause for L3 SMS CP entity
14	GSM cause for L3 SMS RL entity
16	GSM cause for L3 SMS TL entity
17	Proprietary cause for L3 SMS TL entity
21	GSM cause for L3 call-related supplementary services
22	Proprietary cause for L3 call-related supplementary services
33	Proprietary cause for supplementary services manager
34	network cause for supplementary services (GSM 04.08 10.5.4.11 and annex H)
35	supplementary services network error (GSM 04.80 3.6.6)
48	GSM cause for GPRS mobility management (GSM 04.08 annex G.6)
49	Proprietary cause for GPRS mobility management
50	GSM cause for session management (GSM 04.08 annex I)
127	Proprietary cause for protocol module or other local cause
128	supplementary services general problem (GSM 04.80 3.6.7)

ID	Description
129	supplementary services invoke problem (GSM 04.80 3.6.7)
130	supplementary services result problem (GSM 04.80 3.6.7)
131	supplementary services error problem (GSM 04.80 3.6.7)
241	Proprietary cause for GPRS API
243	Proprietary cause for PPP/IP-stack

3.4.2 Proprietary L2 cause

Number	Description
242	L2 decoding error
243	L2 decoding error
244	L2 decoding error
245	L2 decoding error
246	L2 decoding error
247	L2 decodingerror
248	L2 decoding error
249	no network response received, e.g. due to low signal quality
250	L2 decoding error
251	L2 decoding error
252	L2 decoding error
253	L2 decoding error

3.4.3 GSM release cause for L3 Radio Resource (RR)

Number	Description
0	normal event
1	abnormal release, unspecified
2	abnormal release, channel unacceptable
3	abnormal release, timer expired
4	abnormal release, no activity on the radio path
5	pre-emptive release
8	handover impossible, timing advance out of range
9	channel mode unacceptable
10	frequency not implemented
65	call already cleared
95	semantically incorrect message
96	invalid mandatory information
97	message type non-existent or not implemented
98	message type not compatible with protocol state
100	conditional information element error

Number	Description
101	no cell allocation available
111	protocol error unspecified

3.4.4 Proprietary release cause for L3 Radio Resource (RR)

Number	Description
1	RACCHs not answered
2	RACCHs rejected
3	access class of the SIM is barred by the network provider
4	SABM failure
5	radio link counter expiry or perform abnormal release
6	confirm ABORT of the MM
7	respond to DEACT REQ
8	loss of coverage
9	reestablishment not possible
10	T3122 still running
11	cell selection in progress
12	responding to paging
13	location area code has changed
14	circuit switched not available

3.4.5 GSM release cause for Mobility Management (MM) or Session Management (SM)

Number	Description
causes related to MS identification	
2	IMSI unknown in HLR
3	illegal MS
4	IMSI unknown in VLR
5	IMEI not accepted
6	illegal ME
cause related to subscription options	
11	PLMN not allowed
12	location area not allowed
13	roaming not allowed in this location area
causes related to PLMN specific network failures and congestion	
17	network failure
22	congestion
causes related to nature of request	
25	PDP context is deactivated because of a LLC or SNDCP failure

Number	Description
32	service option not supported
33	requested service option not subscribed
34	service option temporary out of order
38	call cannot be identified
causes related to invalid messages	
95	semantically incorrect message
96	invalid mandatory information
97	message type non-existent or not implemented
98	message not compatible with protocol state
99	information element non-existent or not implemented
100	conditional information element error
101	messages not compatible with protocol state
111	protocol error, unspecified
causes related to GPRS	
7	GPRS services not allowed
8	GPRS services not allowed in combination with non-GPRS services
9	MS identity cannot be identified by the network
10	implicitly detached
14	GPRS services not allowed in current PLMN
16	MSC temporary unreachable

3.4.6 Proprietary release cause for L3 Mobility Management (MM)

Number	Description
1	no SIM available
8	no MM connection
9	authentification failure
11	MM performs detach
17	registration failed and will be re-attempted in a short term
18	CM connection establishment failed
19	registration failed and will be re-attempted in a long term
20	RR connection is released
21	MS tries to register
22	SPLMN is not available
23	an MTC is in progress
24	a PLMN scan is in progress
25	the MM is detached, the MS is in MS class C GPRS only
26	the maximum numbers of CM connections is exceeded
27	the MM is not registered
28	the MM state is incompatible

3.4.7 GSM release cause for L3 Call Control (CC)

Number	Description
normal class	
1	unassigned (unallocated) number
3	no route to destination
6	channel unacceptable
8	operator determined barring
16	normal call clearing
17	user busy
18	no user responding
19	user alerting, no answer
21	call rejected
22	number changed
25	pre-emption
26	non-selected user clearing
27	destination out of order
28	invalid number format (incomplete number)
29	facility rejected
30	response to STATUS ENQUIRY
31	normal, unspecified
resource unavailable class	
34	no circuit/channel available
38	network out of order
41	temporary failure
42	switching equipment congestion
43	access information discarded
44	requested circuit/channel not available
47	resource unavailable, unspecified
service or option not available class	
49	quality of service unavailable
50	requested facility not subscribed
55	incoming calls barred within the CUG
57	bearer capability not authorized
58	bearer capability not presently available
63	service or option not available, unspecified
service or option not implemented	
65	bearer service not implemented
68	ACM equal or greater than ACM max
69	requested facility not implemented
70	only restricted digital information bearer capability is available
79	service or option not implemented, unspecified
invalid message (e.g. parameter out of range) class	

Number	Description
81	invalid transaction identifier value
87	user not member of CUG
88	incompatible destination
91	invalid transit network selection
95	semantically incorrect message
protocol error (e.g. unknown message) class	
96	invalid mandatory information
97	message type non-existant or not implemented
98	message type not comaptible with protocol state
99	information element non-existent or not implemented
100	conditional information element error
101	message not compatible with protocol
102	recovery on timer expiry
111	protocol error, unspecified
interworking class	
127	interworking, unspecified

3.4.8 Proprietary release cause for L3 Call Control (CC)

Number	Description
2	service not available
3	hold procedure not available
4	temporary no service, previous procedure not yet finished
7	mobile received a release (complete) message during a modify procedure (modify reject)
10	number not included in FDN list
notifications	
300	called party barred incoming call

3.4.9 GSM Release cause for Supplementary Service Call

Number	Description
0	no error (default)
1	unknown subscriber
9	illegal subscriber
10	bearer service not provisioned
11	teleservice not provisioned
12	illegal equipment
13	call barred
15	CUG reject
16	illegal SS operation

Number	Description
17	SS error status
18	SS not available
19	SS subscription violation
20	SS incompatibility
21	facility not supported
27	absent subscriber
29	short term denial
30	long term denial
34	system failure
35	data missing
36	unexpected data value
37	PW registration failure
38	negative PW check
43	number of PW attempts violation
71	unknown alphabet
72	USSD busy
126	max nums of MPTY calls exceeded
127	resources not available
general problem codes	
300	unrecognized component
301	mistyped component
302	badly structured component
invoke problem codes	
303	duplicate invoke ID
304	unrecognized operation
305	mistyped parameter
306	resource limitation
307	initiating release
308	unrecognized linked ID
309	linked response unexpected
310	unexpected linked operation
return result problem codes	
311	unrecognize invoke ID
312	return result unexpected
313	mistyped parameter
return error problem codes	
314	unrecognized invoke ID
315	return error unexpected
316	unrecognized error
317	unexpected error
318	mistyped parameter

3.4.10 GSM release cause for Session Management (SM)

Number	Description
102	recovery on timer expiry

3.4.11 GSM cause for L3 Protocol module or other local cause

Number	Description
10	unspecified RLP error
14	unreliable data link or if the peer instance is not RLP
15	SREJ timed out
16	REMAP procedure timed out

3.4.12 Proprietary release cause for GPRS API

Number	Description
0	regular deactivation of the call
1	action temporary not allowed
2	wrong connection type
3	specified data service profile invalid
4	PDP type or address is unknown
5	FDN check was not successful; GPRS attach and PDP context activation blocked
9	GPRS service not available
255	undefined

3.4.13 Proprietary release cause for PPP/IP-Stack

Number	Description
0	regular call deactivation
1	LCP stopped
255	undefined

3.5 ATS18 Extended call release report

ATS18 controls the presentation of extended call release reports for circuit switched fax and data calls. Extended call release reports related to voice calls are controlled via AT+CEER.

The call release report is presented in numeric format and shows as follows:

+CAUSE: <locationID>:<reason>

If enabled the message will be reported every time a fax or data call is released or fails to be established.

Syntax

Read Command

ATS18?

Response(s)

<n>
OK

Write Command

ATS18=<n>

Response(s)

OK
ERROR

PIN	ASC0	ASC1	USB	MUX1	MUX2	MUX3	Charge	✈	Last
-	+	-	+	+	-	-	-	+	-

Reference(s)

V.250

Parameter Description

<n>(num)(&W)(&V)

An odd number enables the presentation of the extended call release report. Any even number disables this feature.

0(&F)...255

<locationID>(num)

Location ID as number code, see also <locationID> of AT+CEER.
Location IDs are listed in Section 3.4.1, Cause Location ID for the extended error report. Each ID is related to another table that contains a list of <reason>s.

<reason>(num)

Reason for last call release as number code (see also <reason> of AT+CEER).
<reason> numbers and the associated descriptions are listed in several tables, sorted by different categories at AT+CEER. The tables can be found proceeding from the Location IDs listed in Section 3.4.1, Cause Location ID for the extended error report.

Examples

EXAMPLE 1

`ATS18=1`	Enables the presentation of extended call release reports.
`OK`	
`ATD03012345678`	Now, a mobile originated data call fails.
`+CAUSE: 8:17`	An extended error report is output, followed by the result code BUSY.
`BUSY`	The Location ID 8 stated in Section 3.4.1 points to Section 3.4.7, with 17 = "User busy".

EXAMPLE 2

`ATS18=1`	Enables the presentation of extended call release reports.
`OK`	
`ATD03012345678`	Now, a mobile originated data call is set up.
`CONNECT 9600/RLP`	
`Hello,....`	
`+++`	Call ends after remote party hung up.
`+CAUSE: 8:16`	Normal call release is reported, followed by the result code NO CARRIER.
`NO CARRIER`	The Location ID 8 stated in Section 3.4.1 points to Section 3.4.7, with 16 = "Normal call clearing".

3.6 AT+CPAS Mobile equipment activity status

The AT+CPAS execute command indicates the activity status of the ME.

Syntax

Test Command
AT+CPAS=?
Response(s)
+CPAS: (list of supported<pas>s) OK

Exec Command
AT+CPAS
Response(s)
+CPAS: <pas> OK

PIN	ASC0	ASC1	USB	MUX1	MUX2	MUX3	Charge	✈	Last
-	+	+	+	+	+	+	-	+	-

Reference(s)
GSM 07.07

Parameter Description

<pas>(num)	
0	Ready
3	Incoming call (ringing)
4	Call in progress or call hold

3.7 AT+WS46 Select wireless network

Syntax

Test Command
AT+WS46=?
Response(s)
+WS46: (list of supported<n>s) OK

Read Command
AT+WS46?
Response(s)
<n> OK

Write Command
AT+WS46=[<n>]
Response(s)
OK ERROR +CME ERROR: <err>

PIN	ASC0	ASC1	USB	MUX1	MUX2	MUX3	Charge	✈	Last
-	+	+	+	+	+	+	-	+	-

Reference(s)
GSM 07.07

Parameter Description

<n>(num)	
12	GSM digital cellular

4. Serial Interface Control Commands

The AT Commands described in this chapter allow the external application to determine various settings related to the TC65i's serial interface.

4.1 ATE Enable command echo

The ATE command determines whether or not the TA echoes characters received from TE during command state.

Syntax

Exec Command
ATE[<value>]
Response(s)
OK

PIN	ASC0	ASC1	USB	MUX1	MUX2	MUX3	Charge	✈	Last
-	+	+	+	+	+	+	-	+	-

Reference(s)
V.250

Parameter Description

<value>(num)(&W)(&V)	
[0]	Echo mode off
1(&F)	Echo mode on

Notes

- In case of using the command without parameter, <value> is set to 0.
- When a Java application is running there is no echo available, existing settings are ignored and attempts to change the settings are disregarded.

4.2 AT&C Set Data Carrier Detect (DCD) Line mode

The AT&C command determines how the state of the DCD line (circuit 109) reflects the TC65i's internal activity.

Syntax

Exec Command
AT&C[<value>]
Response(s)
OK

PIN	ASC0	ASC1	USB	MUX1	MUX2	MUX3	Charge	✈	Last
-	+	-	+	+	+	+	-	+	-

Reference(s)
V.250

Parameter Description

<value>(num)(&W)(&V)	
[0]	DCD line shall always be on.
1(&F)	DCD line shall be on only when data carrier signal is present.
2	DCD line shall be on when one or more Internet services defined on the related serial channel are in state "Connecting" or "Up" as described below. For details on the various service states refer to AT^SISI, parameter <srvState> or AT^SISO, parameter <srvState>. • SOCKET, HTTP, SMTP, POP3: DCD shall be on when <srvState>="Connnecting" or "Up" • FTP: DCD shall be on when data channel is connected, i.e. <srvState>="Up"

4.3 AT&D Set Data Terminal Ready (DTR) line mode

AT&D determines how the ME responds if the DTR line is changed from ON to OFF state during data mode.

Syntax

Exec Command
AT&D[<value>]
Response(s)
OK

PIN	ASC0	ASC1	USB	MUX1	MUX2	MUX3	Charge	✈	Last
-	+	±	+	+	+	+	-	+	-

Reference(s)
V.250

Parameter Description

<value>(num)(&W)(&V)	
[0]	ME ignores status of the DTR line.
1	ON->OFF on DTR: Change to command mode while retaining the connected call.
2(&F)	ON->OFF on DTR: Disconnect (CSD or PPP) data call and change to command mode. During OFF state of the DTR line auto-answer is disabled.

4.4 AT&S Set Data Set Ready (DSR) line mode

AT&S determines how the ME sets the DSR line depending on its communication state.

Syntax

Exec Command
AT&S[<value>]
Response(s)
OK

PIN	ASC0	ASC1	USB	MUX1	MUX2	MUX3	Charge	✈	Last
-	+	-	+	+	+	+	-	+	-

Reference(s)
V.250

Parameter Description

<value>(num)(&W)(&V)	
[0](&F)	DSR line is always ON
1	ME in command mode: DSR is OFF. ME in data mode: DSR is ON.

4.5 AT\Q Flow control

Syntax

Exec Command

AT\Q[<n>]

Response(s)

OK

If RTS/CTS flow control is not supported by interface and <n> is 2 or 3:

ERROR

PIN	ASC0	ASC1	USB	MUX1	MUX2	MUX3	Charge	✈	Last
-	+	+	-	±	±	±	-	+	-

Parameter Description

<n>(num)(&W)(&V)

[0](&F)	Disable flow control
1	XON/XOFF software flow control
2	Only CTS by DCE (TA)
3	RTS/CTS hardware flow control Recommended for the following procedures: incoming or outgoing data calls, fax calls, MUX mode. Often, the initialization routine of Fax programs includes enabling RTS/CTS handshake, eliminating the need to issue AT\Q3 once again.

Notes

- When using XON/XOFF flow control (AT\Q1) in online mode, +++ should not be used while the data transmission is paused with XOFF. Before entering the command mode with +++ the paused transmission should be resumed using the XON character.
- For compatibility reasons, the AT\Q command can be used in Multiplex mode, though the settings will not take effect. However, be aware that whenever you use the AT\Q write command in Multiplex mode and then save the current configuration to the user profile with AT&W, the changed AT\Q setting will become active after restart.
- AT\Q is ignored if used by Java; responses will be invalid or erroneous. Also refer "TC65i Java User's Guide" [3], Section "Configuration of Serial Interface".
- AT+IFC configures flow control separately for each data direction, while AT\Q applies to both directions. Both commands influence each other, i.e. settings made with AT\Q apply to AT+IFC and, vice versa, AT+IFC changes the AT\Q setting.

4.6 AT+IFC Flow Control

AT+IFC controls the flow control mode used by the TC65i separately for each data direction (send and receive). In contrast to this, flow control settings made with AT\Q are identical for both directions.

AT+IFC and AT\Q are designed to configure the TA (i.e. TC65i). The TE must, of course, also be configured. When programming the TE bear in mind that the flow control mode set on the TA must be compliant with the flow control method set on the TE. Please refer notes below.

Syntax

Test Command

```
AT+IFC=?
```

Response(s)

```
+IFC: (list of supported <TEflowcontrol>s), (list of supported <TAflowcontrol>s)
OK
```

Read Command

```
AT+IFC?
```

Response(s)

```
+IFC: <TEflowcontrol>, <TAflowcontrol>
OK
```

Write Command

```
AT+IFC=<TEflowcontrol>, <TAflowcontrol>
```

Response(s)

```
OK
ERROR
+CME ERROR: <err>
```

PIN	ASC0	ASC1	USB	MUX1	MUX2	MUX3	Charge	✈	Last
-	+	+	-	±	±	±	-	+	-

Reference(s)

V.250

Parameter Description

<TEflowcontrol>(num)(&W)

Specifies the method used by the TA when sending data to the TE.

[0](&F)	none
1	XON/XOFF Local setting on the TA. Terminates flow control in the TA and thus, causes the TA to stop sending data to the remote TA.
2	RTS line Local setting on the TA.
3	XON/XOFF Used to evaluate flow control in the TA. If the data flow from the TA requires that the transmission be stopped, the TE inserts the XON/OFF control characters into the data stream to be sent, over the air, to the opposite TE. It is the responsibility of the receiving TE to recognize and filter out from the data stream the XON/OFF control characters. So, both TEs must have XON/OFF flow control enabled. Also, the receiving TA must be configured to use software flow control. This means, that if the sending TA is configured for AT+IFC=3,x the receiving TA must be set to AT+IFC=y,1. In addition, XON/OFF flow control must be

enabled on either TE.
If the TAs and TEs on both sides are properly configured, the transmission of the XON/OFF control characters will instantly stop the data flow. So, value "3" has an immediate effect on the over-the-air connection between both TEs.

`<TAflowcontrol>`(num)(&W)

Specifies the method used by the TA when receiving data from the TE.

[0](&F)	none
1	XON/XOFF
2	CTS line

Notes

- If using XON/XOFF flow control (AT+IFC=1,x or AT+IFC=3,x) in data mode, +++ should not be used while the data transmission is paused with XOFF. Before entering the command mode with +++ the paused transmission should be resumed using the XON character.
- For compatibility reasons, the AT+IFC command can be used in Multiplex mode, though the settings will not take effect. However, be aware that whenever you use the AT+IFC write command in Multiplex mode and then save the current configuration to the user profile with AT&W, the changed AT+IFC setting will become active after restart if autobaud mode is disabled (for details refer AT+IPR).
- AT+IFC and AT\Q usage influence each other, i.e. settings made with AT\Q apply to AT+IFC and, vice versa, AT+IFC changes the AT\Q setting.
- Bear in mind that when you set a flow control method for one direction on the TA (with AT+IFC) the TE must also be configured accordingly.
- The values "1" and "2" have only local effect for the connection between TA and TE. Value "3" has an immediate effect on the over-the-air connection.
- XON/OFF flow control is not recommended for transferring binary files or using the GSM character set (refer AT+CSCS). In this case the data stream might contain characters equal to the values typically used as XON/OFF control characters, i.e. values 11 (hex) resp. 17 (dec) and 13 (hex) resp. 19 (dec).

4.7 AT+ICF Character Framing

AT+ICF controls character framing and parity format used for receiving and transmitting data via TC65i's asynchronous serial interfaces (UART).

Following settings are supported:

- 7 bits, even parity, 1 stop bit (AT+ICF=5,1)
- 7 bits, odd parity, 1 stop bit (AT+ICF=5,0)
- 8 bits, even parity, 1 stop bit (AT+ICF=2,1)
- 8 bits, no parity, 1 stop bit (AT+ICF=3)
- 8 bits, odd parity, 1 stop bit (AT+ICF=2,0)
- 8 bits, no parity, 2 stop bits (AT+ICF=1)

The selected setting is stored in the user defined profile with next AT&W. It will only be used on next start of the TC65i if configured to use a fixed bit rate, i.e. without autobaud usage. The autobaud feature (refer AT+IPR) detects bit rate and character framing currently used by a connected TE. However, this detection suffers some limitations described at Section 4.9.1, Autobauding.
AT+ICF read command will always show the setting stored in the user defined profile, not a currently detected character framing.

For compatibility reason AT+ICF can be used in Multiplex mode (refer AT+CMUX), though setting will not take effect. However, note that settings made on multiplex channel 1 are stored in the user defined profile with next AT&W.

If the current <format> setting uses no parity (e.g. <format>=3) and AT+ICF is used to switch to a format with parity (e.g. <format>=2), it is necessary to explicitly set parameter <parity>, e.g. AT+ICF=2,1. If not done correctly TC65i will respond with "+CME ERROR: invalid index". This is because for <format>=3, the parameter <parity> is set to the internal value 'no parity' which is not supported by <format>=2. Please remember that if an optional parameter is omitted for which no default is stated in this document, the value of the parameter remains unchanged.

If AT+ICF modes 7E1 or 7O1 are set, the parity bit will by default not be transmitted over the air. If the remote party expects the parity bit to be transmitted, additional settings are required via AT^STPB.

Syntax

Test Command

```
AT+ICF=?
```

Response(s)

```
+ICF: (list of supported <format>s), (list of supported <parity>s)
OK
```

Read Command

```
AT+ICF?
```

Response(s)

```
+ICF: <format>[, <parity>]
OK
```

Write Command

```
AT+ICF=[<format>[, <parity>]]
```

Response(s)

```
OK
ERROR
+CME ERROR: <err>
```

PIN	ASC0	ASC1	USB	MUX1	MUX2	MUX3	Charge	✈	Last
-	+	+	-	±	±	±	-	+	-

Reference(s)

V.250

Parameter Description

`<format>`(num)(&W)(&V)

Specifies the character format used for receiving and transmitting.

1	8 data 0 parity 2 stop
2	8 data 1 parity 1 stop
[3](D)	8 data 0 parity 1 stop
5	7 data 1 parity 1 stop

`<parity>`(num)(&W)(&V)

Specifies the method of calculating the parity bit, if a parity bit is supported by `<format>`.
If `<format>` does not support parity, this parameter has to be omitted.

0	odd
1	even

4.8 AT+ILRR Set TE-TA local rate reporting

The command AT+ILRR controls whether or not the intermediate result code "+ILRR" is transmitted from the TA to the TE while a connection is being set up. The result code indicates the local rate. It is issued before the final result code of the connection, e.g. CONNECT, is transmitted to the TE.

Syntax

Test Command

```
AT+ILRR=?
```

Response(s)

```
+ILRR: (list of supported <value>s)
OK
```

Read Command

```
AT+ILRR?
```

Response(s)

```
+ILRR: <value>
OK
```

Write Command

```
AT+ILRR=<value>
```

Response(s)

```
OK
ERROR
+CME ERROR: <err>
```

PIN	ASC0	ASC1	USB	MUX1	MUX2	MUX3	Charge	✈	Last
+	+	-	-	+	-	-	-	+	-

Reference(s)

V.250

Intermediate Result Code

```
+ILRR: <rate>
```

Indicates local port rate setting upon connection setup.

Parameter Description

<value>(num)(&W)(&V)	
0(&F)	Disables reporting of local port rate
1	Enables reporting of local port rate

<rate>(num)	
Port rate setting upon connection setup (bps)	
0	Autobauding (see Section 4.9.1, Autobauding). Not supported on ASC1. Not usable with Java.
300	
600	
1200	
2400	
4800	
9600	

14400
19200
28800
38400
57600
115200
230400
460800

4.9 AT+IPR Bit Rate

AT+IPR allows to query and set the bit rate of the TC65i's asynchronous serial interfaces (UART).
The test command returns the values of supported automatically detectable bit rates and the values of the supported fixed bit rates.
The read command returns the the currently set <rate> value.
The write command specifies the bit rate to be used for the interface. Delivery bit rate value (<rate>) is 115200bps on ASC0 and 115200bps on ASC1. This setting will not be restored with AT&F.

If using a fixed bit rate, make sure that both TC65i and TA are configured to the same rate. A selected fixed bit rate takes effect after the write command returns OK and is stored in non-volatile memory. It is not recommended to set bit rates lower than 9600 bps in order to avoid timing problems (see Section 1.5, Communication between Customer Application and TC65i for details about timing).
In case of autobauding mode (AT+IPR=0) the detected TA bit rate will not be saved and, therefore, needs to be resynchronized after any restart of the ME (for details refer Section 4.9.1, Autobauding). If autobauding is activated, the TA will automatically recognize bit rate, character framing and parity format (refer AT+ICF) currently used by the TE.
In Multiplex mode the write command will not change the bit rate currently used, but the new bit rate will be stored and becomes active, when the module is restarted.
If Java is running, the firmware will ignore any settings made with AT+IPR. Responses to the read, write or test command will be invalid or deliver "ERROR". Also refer "TC65i Java User's Guide" [3], Section "Configuring serial interface".
The current setting of AT+IPR will be preserved when you download firmware (i.e. a firmware update does not restore the factory setting) or in the event of power failure.

Syntax

Test Command

```
AT+IPR=?
```

Response(s)

```
+IPR: (list of supported auto-detectable <rate>s) , (list of supported fixed-only <rate>s)
OK
```

Read Command

```
AT+IPR?
```

Response(s)

```
+IPR: <rate>
OK
```

Write Command

```
AT+IPR=<rate>
```

Response(s)

```
OK
ERROR
+CME ERROR: <err>
```

PIN	ASC0	ASC1	USB	MUX1	MUX2	MUX3	Charge	✈	Last
-	+	±	-	±	±	±	-	+	-

Reference(s): V.250

Parameter Description

<rate>(num)(&V)

bit rate per second (bps)

0	Activates autobauding. Not supported on ASC1. Not usable with Java. See Section 4.9.1, Autobauding for further details.
300	

600
1200
2400
4800
9600
14400
19200
28800
38400
57600
115200
230400
460800
921600

Note

- Generally, AT+IPR should be used as a standalone command as specified in Section 1.4.2, Concatenating AT Commands. If nevertheless combinations with other commands on the same command line cannot be avoided, there are several constraints to be considered:
  - Avoid combinations with the AT commands listed in Section 1.4.2, Concatenating AT Commands.
  - Keep in mind that there shall be a minimum pause between two AT commands as specified in Section 1.5, Communication between Customer Application and TC65i.
  - If local echo is active (ATE1) and AT+IPR=x is entered with other commands you may encounter the following problem: If switching to the new bit rate takes effect while a response is being transmitted, the last bytes may be sent with the new bit rate and thus, not properly transmitted. The following commands will be correctly sent at the new bit rate.

4.9.1 Autobauding

To take advantage of autobaud mode specific attention must be paid to the following requirements:

- Synchronization between TE and TA:
  Ensure that TE and TA are correctly synchronized and the bit rate used by the TE is detected by the TA. To allow the bit rate to be synchronized simply use an "AT" or "at" string. This is necessary when you start up the ME while autobauding is enabled. It is recommended to wait 3 to 5 seconds before sending the first AT character. Otherwise undefined characters might be returned.
- Restrictions on autobauding operation:
  - If autobaud mode is enabled, then autobauding does not take effect immediately after the write command AT+IPR=0 ends. Instead the old bit rate remains active. The autobaud mode is activated with the next restart of the TA. This is indicated by any following AT+IPR read command which still returns the old bit rate until the next restart.
    Before you activate autobauding switch on the local echo with ATE1. To verify if autobauding has become effective after restart first send only the characters "AT" or "at" and check that they are echoed within 100ms. In some cases you may need to repeat this several times, until both characters are properly echoed within 100ms.
    Please note that after the successful synchronization between TE and TA the autobauding mechanism of the TA is deactivated until next restart. So, while autobauding is enabled you will need to restart the TA each time after changing the bit rate of the TE.
  - The TA cannot distinguish between 1 and 2 stop bits. Therefore, 1 stop bit will be used by the TA.
  - The command A/ cannot be used.
  - Only the first "AT" or "at" after restart of the module can be detected (neither "At" nor "aT"). This means

that all the AT commands have to use the same bit rate and frame type.

- The second serial interface ASC1 does not support autobauding.
- Autobauding cannot be used if the ME operates with Java.
- URCs that may be issued before the ME detects a new bit rate (by receiving the first AT character) will be sent at the previously detected bit rate or, after ME restart, at 115200 bps.

- Autobauding and bit rate after restart:
  Unless the bit rate is determined, the following constraints apply:
  - An incoming CSD call or a network initiated GPRS request cannot be accepted. This must be taken into account when autobauding and autoanswer mode (ATS0 ≠ 0) are enabled at the same time, escpecially if SIM PIN 1 authentication is done automatically and the setting ATS0 ≠ 0 is stored to the user profile with AT&W.
  - Until the bit rate is found, URCs generated after restart will be output at 115200 bps. This applies only to user defined URCs, such as "+CREG", "CCWA", "^SCKS" etc. The URCs "^SYSSTART", "^SYSSTART CHARGE-ONLY MODE" and "^SYSSTART AIRPLANE MODE" will not be indicated when autobauding is enabled.

  Note: To avoid any problems caused by undetermined bit rates in the direction from TA to TE we strongly recommend to configure a fixed bit rate rather than autobauding.
- Autobauding and multiplex mode:
  If autobauding is active you cannot switch to multiplex mode (see AT+CMUX).

4.10 AT+CMUX Multiplex Mode

Multiplex mode enables the use of three (virtual) channels over one serial interface [6] [7]. Every channel is used as an independent serial link taking advantage of up to three simultaneous AT command or data sessions.
For example, the first channel can be used to send or receive data, while two channels are still available to control the module with AT commands or to establish a dedicated channel to receive Unsolicited Result Codes (URC), e.g. "+CIEV:" or ""RING".

TC65i incorporates an internal multiplexer and thus integrates all the functions needed to implement full-featured multiplex solutions. For the application on top, customers have the flexibility to create their own multiplex programs conforming to the multiplexer protocol. To help system integrators save the time and expense of designing multiplexer applications, Cinterion Wireless Modules GmbH offers WinMUX, a ready-to-use multiplex driver for Windows XP and Windows Vista. Another approach is to develop customized solutions based on the sources of the WinMUX driver.
Refer to [6] which provides a detailed description of the multiplex architecture and step-by-step instructions of how to install and configure the multiplex mode. The WinMUX driver and its source files can be supplied on request. Please contact your local distributor to obtain the latest installation software and user's guide.

All information provided in this section applies to the ASC0 interface only. The second interface ASC1 has no support of Multiplex mode.
Multiplex mode requires character framing to be set to 8 data, no parity and 1 stop bit. This setting can be made using (AT+ICF=3).
AT+CMUX write command is used to enter Multiplex mode. Setup of the logical channels is initiated by the TE, i.e. the TE acts as initiator. This means that the TE shall ensure that logical channels are established before any further actions on the channels can be started. There is a timeout of five seconds, if the multiplexer protocol is enabled but no multiplexer control channel is established. Afterwards TC65i returns to AT command mode.
The parameter maximum frame size (N1) according to GSM 07.10 is implemented as 98 bytes by default. All other parameters are not available. Refer to [6] for further details regarding frame size.
Multiplex mode is not usable by Java applications. The mode cannot be started if the ME is Java controlled.
If Java autostart is enabled with AT^SCFG, it is not possible to activate Multiplex mode on ASC0 or USB.

Syntax

Test Command

```
AT+CMUX=?
```

Response(s)

```
+CMUX: (list of supported<mode>s)
OK
```

Read Command

```
AT+CMUX?
```

Response(s)

```
+CMUX: <mode>
OK
ERROR
+CME ERROR: <err>
```

Write Command

```
AT+CMUX=<mode>
```

Response(s)

```
OK
ERROR
+CME ERROR: <err>
```

PIN	ASC0	ASC1	USB	MUX1	MUX2	MUX3	Charge	✈	Last
-	+	-	+	-	-	-	-	+	+

Reference(s)

GSM 07.07, GSM 07.10, 3GPP TS 27.010

Parameter Description

<mode>(num)	
Multiplexer transparency mechanism	
0	Basic option

<subset>(num)	
Subparameters defined in GSM07.07 are adjusted for control and logical channels as follows	
0	UIH frames used only (control channel)

4.10.1 Restrictions on Multiplex mode

In multiplex mode, data and fax calls can only be set up on logical channel 1. Due to this restriction, AT commands have a different behavior on channels 2+3 compared to channel 1. Several commands are not available, others return different responses. This section summarizes the concerned commands. For general rules and restrictions to be considered in Multiplex mode please refer to [6].

Table 4.1: Availability of AT Commands on Virtual Channels

Command	Behavior on channel 1	Behavior on channel 2+3
+++	not usable, but see note 2)	not usable, but see note 2)
AT+CBST	as described	not usable
AT+CRLP	as described	not usable
AT+CG... (GPRS commands)	as described	see note 3)
AT+F... (Fax commands)	as described	not usable
AT&S	as described	not usable
ATA	as described	no Data Calls
ATD	as described	no Data Calls
ATDI	as described	not usable
ATL	as described	not usable
ATM	as described	not usable
ATO	as described	not usable
ATS6 1)	as described	not usable
ATS7 1)	as described	not usable
ATS8 1)	as described	not usable
ATS10 1)	as described	not usable
ATS18 1)	as described	not usable

1) The ME supports the registers S0 - S29. You can change S0,S3,S4,S5,S6,S7,S8,S10 and S18 using the related ATSn commands (see starting from ATS0). The other registers are read-only and for internal use only!

2) The applicability of the +++ escape sequence depends on the customer's external application based on the Mulitplexer Protocol. Recommendations for implementing an appropriate modem status command (MSC) are provided in [6], Section "Escape Sequence".

3) PDP contexts can be defined on any channel, but are visible and usable only on the channel on which they are defined (thus it is not possible to define a context on channel 2 and activate it on channel 3). GPRS connections can be established on two channels at a time.

Table 4.2: Summary of AT commands with Different Behavior in Multiplex Mode

Command	Description
AT\Q	It is recommended to use hardware flow control (AT\Q3). XON/XOFF flow control (AT\Q1) is not supported in Multiplex mode. See note regarding AT\Qn settings stored with AT&W if Multiplex mode is active.
AT&V	Different default configurations on channels 1, 2 and 3.
AT&W	Different user profiles can be stored on each channel.
AT+IPR	In Multiplex mode, the write command AT+IPR=<rate> will not change the bit rate currently used, but the new bit rate will be stored and becomes active, when the module is restarted.
AT+IPR=0	Multiplex mode cannot be activated while autobauding is enabled.
AT+CALA	On each channel an individual <text> message can be stored. but only one time setting applies to all channels. This means an alarm <time> set on one of the channels overwrites the time setting on all remaining channels. Therefore, the total number of alarm events returned by the read command AT+CALA? will always be <n>=0, no matter whether individual text messages are stored. When the alarm is timed out and executed the ME sends the URC only on the channel where the most recent alarm setting was made. The alarm time will be reset to "00/01/01,00:00:00" on all channels.
AT+CMEE	Presentation mode can be separately configured for each channel.
AT+CNMA	If Multiplex mode is activated the +CNMI parameter will be set to zero on all channels, if one channel fails to acknowledge an incoming message within the required time.
AT+CNMI	Phase 2+ parameters can only be used on one channel. The parameter for <mt> and <ds> on the other channels have to be set to zero. If either a SM or a Status Report is not acknowledged, all +CNMI parameter will be set to zero on all channels.
AT+CFUN	If the ME is in Multiplexer mode, it is not recommended to activate SLEEP mode with AT+CFUN=<fun>. The best approach to properly control SLEEP mode in this case is to issue the PSC messages described in [6], Section "Power saving control (PSC)".
AT+CPMS	Parameter <mem3> will be the same on all instances, but the settings of <mem1> and <mem2> may vary on each instance.
AT^SSDA	If one instance is set to <da>=1 and <mt>=1, then all other instances must be configured for <mt>=0.

4.11 AT^STPB Transmit Parity Bit (for 7E1 and 7O1 only)

This command is intended only for use with 7E1 and 7O1. In addition to the 7E1 or 7O1 settings made with AT+ICF the command AT^STPB specifies whether or not to transmit the parity bit over the air.

Syntax

Test Command
AT^STPB=?
Response(s)
^STPB: (list of supported <n>s) OK

Read Command
AT^STPB?
Response(s)
^STPB: <n> OK

Write Command
AT^STPB=<n>
Response(s)
OK ERROR +CME ERROR: <err>

PIN	ASC0	ASC1	USB	MUX1	MUX2	MUX3	Charge	✈	Last
-	+	+	-	±	±	±	-	+	-

Command Description

The test command returns the supported values of the parameter <n>.

The read command returns the current value of the parameter <n>.

The write command can be used to control the handling of the parity bit. If command fails, "+CME ERROR: unknown" will be returned.

Parameter Description

<n>(num)(&W)	
0(&F)	The parity bit will not be transmitted over the air and will be replaced with 0. This mode is the default setting if 7E1 or 7O1 is activated with AT+ICF.
1	In a data connection 8 bits will be transmitted, including the parity bit, i.e. the parity bit will be properly transmitted over the air. The setting shall be used if problems are encountered when TC65i is running in the default 7E1 or 7O1 mode enabled with AT+ICF. In this case, AT^STPB=1 shall be set in addition to the 7E1 or 7O1 settings selected with AT+ICF.

Note

- Command is usable if multiplexer is enabled but setting is ignored.

5. Security Commands

The AT Commands described in this chapter allow the external application to determine various security related settings.

5.1 AT+CPIN PIN Authentication

The AT+CPIN write command can be used to enter one of the passwords listed below. The read command can be used to check whether or not the ME is waiting for a password, or which type of password is required.

This may be for example the SIM PIN1 to register to the GSM network, or the SIM PUK1 to replace a disabled SIM PIN1 with a new one, or the PH-SIM PIN if the client has taken precautions for preventing damage in the event of loss or theft etc. If requested by the ME AT+CPIN may also be used for the SIM PIN2 or SIM PUK2.

If no PIN1 request is pending (for example if PIN1 authentication has been done and the same PIN1 is entered again) TC65i responds "+CME ERROR: operation not allowed"; no further action is required.

Each time a password is entered with AT+CPIN the module starts reading data from the SIM. The duration of reading varies with the SIM card. This may cause a delay of several seconds before all commands which need access to SIM data are effective. See Section 23.1, Restricted access to SIM data after SIM PIN authentication for further detail.

Syntax

Test Command

```
AT+CPIN=?
```

Response(s)

```
OK
```

Read Command

```
AT+CPIN?
```

Response(s)

```
+CPIN: <code>
OK
ERROR
+CME ERROR: <err>
```

Write Command

```
AT+CPIN=<pin>[, <new pin>]
```

Response(s)

```
OK
ERROR
+CME ERROR: <err>
```

PIN	ASC0	ASC1	USB	MUX1	MUX2	MUX3	Charge	✈	Last
-	+	+	+	+	+	+	-	+	-

Reference(s)

GSM 07.07

Parameter Description

`<pin>`(str)

Password (string type), usually SIM PIN1.
If the requested password was a PUK, such as SIM PUK1 or PH-FSIM PUK or another password, then `<pin>` must be followed by `<new pin>`.

`<new pin>`(text)

If the requested code was a PUK: specify a new password or restore the former disabled password. See Section 5.1.1, What to do if PIN or password authentication fails? for more information about when you may need to enter the PUK.

`<code>`(text)

SIM PIN authentication	
READY	PIN has already been entered. No further entry needed.
SIM PIN	ME is waiting for SIM PIN1.
SIM PUK	ME is waiting for SIM PUK1 if PIN1 was disabled after three failed attempts to enter PIN1.
SIM PIN2	ME is waiting for PIN2. This is only applicable when an attempt to access a PIN2 related feature was acknowledged with +CME ERROR: 17 ("SIM PIN2 required"), for example when the client attempts to edit the FD phonebook). In this case the read command `AT+CPIN`? also prompts for SIM PIN2. Normally, the `AT+CPIN2` command is intended for SIM PIN2.
SIM PUK2	ME is waiting for PUK2 to unblock a disabled PIN2. As above, this is only necessary when the preceding command was acknowledged with +CME ERROR: 18 ("SIM PUK2 required") and only if the read command `AT+CPIN`? also prompts for SIM PUK2. Normally, the `AT+CPIN2` command is intended for SIM PUK2.
Phone security locks set by client or factory	
PH-SIM PIN	ME is waiting for phone-to-SIM card password if "PS" lock is active and the client inserts other SIM card than the one used for the lock. ("PS" lock is also referred to as phone or antitheft lock).
PH-SIM PUK	ME is waiting for Master Phone Code, if the above "PS" lock password was incorrectly entered three times.
PH-FSIM PIN	ME is waiting for phone-to-very-first-SIM card. Necessary when "PF" lock was set. When powered up the first time, ME locks itself to the first SIM card put into the card holder. As a result, operation of the mobile is restricted to this one SIM card (unless the PH-FSIM PUK is used as described below).
PH-FSIM PUK	ME is waiting for phone-to-very-first-SIM card unblocking password to be given. Necessary when "PF" lock is active and other than first SIM card is inserted.
PH-NET PUK	ME is waiting for network personalisation unblocking password
PH-NS PIN	ME is waiting for network subset personalisation password
PH-NS PUK	ME is waiting for network subset unblocking password
PH-SP PIN	ME is waiting for service provider personalisation password
PH-SP PUK	ME is waiting for service provider personalisation unblocking password
PH-C PIN	ME is waiting for corporate personalisation password
PH-C PUK	ME is waiting for corprorate personalisation un-blocking password

Notes

- Successful PIN authentication only confirms that the entered PIN was recognized and correct. The output of the result code OK does not necessarily imply that the mobile isregistered to the desired network.
  Typical example: PIN was entered and accepted with OK, but the ME fails to register to the network. This may be due to missing network coverage, denied network access with currently used SIM card, no valid roaming agreement between home network and currently available operators etc.
  TC65i offers various options to verify the present status of network registration: For example, the AT+COPS command indicates the currently used network. With AT+CREG you can also check the current status and activate an unsolicited result code which appears whenever the status of the network registration changes (e.g. when the ME is powered up, or when the network cell changes).
- <pin> and <new pin> can also be entered in quotation marks (e.g. "1234").
- To check the number of remaining attempts to enter the passwords use the AT^SPIC command.
- See AT+CPWD and AT^SPWD for information on passwords.
- See AT+CLCK and AT^SLCK for information on lock types.

5.1.1 What to do if PIN or password authentication fails?

PIN1 / PUK1:
After three failures to enter PIN 1, the SIM card is blocked (except for emergency calls). +CME ERROR: 12 will prompt the client to unblock the SIM card by entering the associated PUK (= PIN Unblocking Key / Personal Unblocking Key). After ten failed attempts to enter the PUK, the SIM card will be invalidated and no longer operable (the device will respond with: +CME ERROR: 770, which stands for: SIM invalid - network reject). In such a case, the card needs to be replaced. PIN1 consists of 4 to 8 digits, PUK1 is an 8-digit code only.
To unblock a disabled PIN1 you have two options:

- You can enter AT+CPIN=PUK1,new PIN1.
- You can use the ATD command followed by the GSM code **05*PUK*newPIN*newPIN#;.

PIN2 / PUK2:
PIN2 prevents unauthorized access to the features listed in AT+CPIN2. The handling of PIN2 varies with the provider. PIN2 may either be a specific code supplied along with an associated PUK2, or a default code such as 0000. In either case, the client is advised to replace it with an individual code. Incorrect input of PUK2 will permanently block the additional features subject to PIN2 authentification, but usually has no effect on PIN1. PIN2 consists of 4 digits, PUK2 is an 8-digit code only.
To unblock a disabled PIN2 you have two options:

- You can enter AT+CPIN2=PUK2,new PIN2.
- You can use the ATD command followed by the GSM code **052*PUK2*newPIN2*newPIN2#;.

Phone lock:
If the mobile was locked to a specific SIM card (= "PS" lock or phone lock), the PUK that came with the SIM card cannot be used to remove the lock. After three failed attempts to enter the correct password, ME returns +CPIN: PH-SIM PUK (= response to read command AT+CPIN?), i.e. it is now waiting for the Master Phone Code. This is an 8-digit device code associated to the IMEI number of the mobile which can only by obtained from the manufacturer or provider. When needed, contact Cinterion Wireless Modules GmbH and request the Master Phone Code of the specific module.
There are two ways to enter the Master Phone code:

- You can enter AT+CPIN=Master Phone Code
- You can use the ATD command followed by the GSM code *#0003*Master Phone Code#;.

Usually, the Master Phone Code will be supplied by mail or e-mail. If the received number is enclosed in the *# codes typically used for the ATD option, it is important to crop the preceding *#0003* characters and the appended #.
Example: You may be given the string *#0003*12345678#. When prompted for the PH-SIM PUK simply enter 12345678.
If incorrectly input, the Master Phone Code is governed by a specific timing algorithm: (n-1)*256 seconds (see table below). The timing should be considered by system integrators when designing an individual MMI.

Number of failed attempts	Time to wait before next input is allowed
1st failed attempt	No time to wait
2nd failed attempt	4 seconds
3rd failed attempt	3 * 256 seconds
4th failed attempt	4 * 256 seconds
5th failed attempt	5 * 256 seconds
6th failed attempt and so forth	6 * 256 seconds and so forth

SIM locks:
These are factory set locks, such as "PF", "PN", "PU", "PP", "PC". An 8-digit unlocking code is required to operate the mobile with a different SIM card, or to lift the lock. The code can only be obtained from the provider.
Failure to enter the password is subject to the same timing algorithm as the Master Phone Code (see Table above).

Call barring:
Supported modes are "AO", "OI", "OX", "AI", "IR", "AB", "AG", "AC". If the call barring password is entered incorrectly three times, the client will need to contact the service provider to obtain a new one.

Related sections:
"+CME ERROR: <err>" values are specified at Section 2.12.1, CME/CMS Error Code Overview. For further instructions and examples see AT+CLCK, AT^SLCK, AT+CPWD and AT^SPWD.
For a complete list of Star-Hash codes please refer Section 23.2, Star-Hash (*#) Network Commands.

5.2 AT+CPIN2 PIN2 Authentication

AT+CPIN2 controls network authentication of the TC65i.
The read command returns an alphanumeric string indicating whether or not network authentication is required. The write command allows the TC65i to store the entered password. This may be for example the SIM PIN2 to benefit from the features listed below, or the SIM PUK2 to replace a disabled PIN2 with a new one. Note that PIN2 can only be entered if PIN1 authentication was done.
If the TC65i is requesting SIM PUK2, use <pin> to enter the PUK2, followed by <new pin> to specify the new PIN2.

Syntax

Test Command

```
AT+CPIN2=?
```

Response(s)

```
OK
```

Read Command

```
AT+CPIN2?
```

Response(s)

```
+CPIN2: <code>
OK
ERROR
+CME ERROR: <err>
```

Write Command

```
AT+CPIN2=<pin>[, <new pin>]
```

Response(s)

```
OK
ERROR
+CME ERROR: <err>
```

PIN	ASC0	ASC1	USB	MUX1	MUX2	MUX3	Charge	✈	Last
+	+	+	+	+	+	+	-	+	-

Reference(s)

GSM 07.07

Parameter Description

<pin>(str)

Password (string type), usually SIM PIN2 or, if requested, SIM PUK2.

<new pin>(str)

If the requested code was SIM PUK2: new password (PIN2).
See Section 5.1.1, What to do if PIN or password authentication fails? for more information about when you may need to enter the PUK.

<code>(text)

READY	ME is not pending for any password.
SIM PIN2	ME is waiting for SIM PIN2. This <code> is returned only when PIN2 authentication has not yet been done or has failed ("+CME ERROR: 17").
SIM PUK2	ME is waiting for SIM PUK2. This <code> is returned only when PIN2 authentication has failed and ME is pending for SIM PUK2 (i.e. "+CME ERROR: 18").

Note

- Functions accessible only after PIN2 authentication:
  AT+CACM: Accumulated call meter (ACM) reset or query
  AT+CAMM: Accumulated call meter maximum (ACMmax) set or query
  AT+CLCK: Facility lock to "FD" (Fixed dialing phonebook)
  AT^SLCK: Facility lock to "FD" (Fixed dialing phonebook)
  AT+CPWD: Change "P2"password
  AT^SPWD: Change "P2"password
  AT+CPUC: Price per unit and currency table
  AT+CPIN2: Enter SIM PIN2 or SIM PUK2 if requested.

  For example, SIM PIN2 will be needed when you attempt to edit the "FD" phonebook and ME returns "+CME ERROR: 17" or "+CPIN: SIM PIN2".
  Once the required <pin> has been entered correctly, PIN2 authentication code changes to READY. After 300s, a repetition of the authentication process is required (PIN2 authentication code changes from READY to SIM PIN2).

Examples

EXAMPLE 1

Change PIN2

```
AT+CPWD="P2","0000","8888"                (where "0000" = old PIN2 and "8888" = new PIN2)
OK
```

EXAMPLE 2

Unblock a disabled PIN2

```
AT+CPIN2?
+CPIN2: SIM PUK2                          PIN2 has been disabled, PUK2 must be entered
OK                                        to define a new PIN2
AT+CPIN2=12345678,8888                    where "12345678" is the PUK2, and "8888" the new
                                          PIN2.
```

EXAMPLE 3

Write into "FD" phonebook

```
AT+CPBS="FD"
OK
AT+CPBW=2,"+493012345678",145,"Charly"
+CME ERROR: 17                            access denied due to missing PIN2 authentication
AT+CPIN2=8888
OK
AT+CPBW=2,"+493012345678",145,"Charly"
OK
```

5.3 AT^SPIC Display PIN counter

The AT^SPIC command can be used to find out whether the ME is waiting for a password and, if so, how many attempts are left to enter the password.

The execute command returns the number of attempts still available for entering the currently required password, for example the PIN, PUK, PH-SIM PUK etc.

The read command AT^SPIC? indicates which password the number of attempts stated by the execute command actually refers to. Also, the write command may be used to query the counter for a specific password: It indicates the number of attempts still available for entering the password identified by <facility>, for example the PIN, PIN2, PH-SIM PIN etc.

To check whether or not you need to enter a password use the read commands AT+CPIN?, AT+CPIN2? and AT^SPIC?. If the response to AT+CPIN? is "READY" the counter of the execute command AT^SPIC relates to PIN2. See last example. If the responses to AT+CPIN? and AT+CPIN2? both read "READY", no password is currently required, and the referrer of the execute command AT^SPIC is explicitly undefined.

Syntax

Test Command

```
AT^SPIC=?
```

Response(s)

```
OK
```

Read Command

```
AT^SPIC?
```

Response(s)

```
^SPIC: <code>
OK
```

Exec Command

```
AT^SPIC
```

Response(s)

```
^SPIC: <counter>
OK
```

Write Command

```
AT^SPIC=<facility>
```

Response(s)

```
^SPIC: <counter>
OK
ERROR
+CME ERROR: <err>
```

PIN	ASC0	ASC1	USB	MUX1	MUX2	MUX3	Charge	✈	Last
-	+	+	+	+	+	+	-	+	-

Parameter Description

<counter>(num)

Number of attempts left to enter the currently required password. This number will be counted down after each failure.

<facility>(str)	
Password for which the corresponding PIN counter is to be displayed.	
“SC“	SIM PIN or SIM PUK. If the SIM PIN has been deactivated after three failed attempts, the counter for SIM PUK will be returned instead.
“PS“	"Phone code" or "device code" (cf. AT+CLCK and AT+CPWD). If incorrectly entered three times, the Master Phone Code is required to lift the lock and the number of remaining attempts for the master phonecode will be returned.
“P2“	SIM PIN2 or SIM PUK2. If the SIM PIN2 has been deactivated after three failed attempts, the counter for SIM PUK2 will be returned instead.
“PN“	Network Personalisation

<code>(text)	
Identification of the currently required password.	
SIM PIN	ME is waiting for SIM PIN1.
SIM PUK	ME is waiting for SIM PUK1 if PIN1 was disabled after three failed attempts to enter PIN1.
SIM PIN2	ME is waiting for PIN2, when the attempt to access PIN2 requiring features was acknowledged with "+CME ERROR: 17" (e.g. if the user attempts to edit the FD phonebook).
SIM PUK2	ME is waiting for PUK2 to unblock a disabled PIN2. Necessary if preceding command was acknowledged with "+CME ERROR: 18".
PH-SIM PIN	ME is waiting for phone-to-SIM card password if "PS" lock is active and user inserts other SIM card than the one used for the lock. ("PS" lock is also referred to as phone or antitheft lock).
PH-SIM PUK	ME is waiting for Master Phone Code, if the above "PS" lock password was incorrectly entered three times.
PH-NET PUK	ME is waiting for network personalisation unblocking password

Notes

- Whenever the required password changes, <counter> changes to reflect that change. Please refer to the examples below.
- For passwords associated to the phone lock ("PS" lock set by user or factory) or other factory set locks, such as "PF", "PN", "PU", "PP", "PC" the number of attempts is subject to a timing algorithm explained in AT+CPIN. If these passwords are incorrectly entered the counter first returns 3, 2 and 1 remaining attempt(s), but then gives the total number of attempts which amounts to 63 (see example below).
- See also Chapters AT+CLCK, AT+CPIN, AT+CPIN2, AT+CPWD, AT^SLCK for further information on locks and passwords.

Examples

EXAMPLE 1

The user fails to provide a correct SIM PIN three times. The counter decreases each time. After the counter reaches zero, the SIM PUK is required. After each failure to enter a correct SIM PUK, the counter decreases.

```
at+cpin?
+CPIN: SIM PIN
OK                                          Currently required password is PIN1.
at^spic
^SPIC: 3
OK                                          3 attempts left.
at+cpin=9999
+CME ERROR: incorrect password
```

```
at^spic
^SPIC: 2                                  2 attempts left.
OK
at+cpin=9999
+CME ERROR: incorrect password
OK
at^spic
^SPIC: 1                                  1 attempt left.
OK
at+cpin=9999
+CME ERROR: incorrect password
at+cpin?
+CPIN: SIM PUK
OK                                        Now required password is PUK 1.
at^spic
^SPIC: 10
OK                                        10 attempts left for PUK 1.
at+cpin=01234567,1234
+CME ERROR: incorrect password
at^spic
^SPIC: 9
OK                                        9 attempts left for PUK 1.
```

EXAMPLE 2

Though a mobile is locked to a specific SIM card (phone lock), the user attempts to operate it with another SIM card. The user correctly enters the SIM PIN of the SIM card currently inserted, but then fails to give the "PS" lock password (PH-SIM PUK):

```
at+cpin=9999
OK
at+cpin?
+CPIN: PH-SIM PIN                         ME is waiting for the phone lock password.
OK
at^spic
^SPIC: 3                                  3 attempts left.
OK
at+cpin=4711
+CME ERROR: incorrect password
at^spic?
^SPIC: 2                                  2 attempts left.
OK
at+cpin=4712
+CME ERROR: incorrect password
at^spic
^SPIC: 1                                  1 attempt left.
OK
at^spic?
^SPIC: PH-SIM PIN                         Displayed counter refers to phone lock password.
OK

at+cpin=4713
+CME ERROR: incorrect password
at^spic
^SPIC: 63
OK
at^spic?
^SPIC: PH-SIM PUK                         Displayed counter refers to master phone code.
OK
```

```
at+cpin=4714
+CME ERROR: incorrect password
at^spic
^SPIC: 63
OK
```

EXAMPLE 3

This example shows that after successful SIM PIN1 authentication the counter of the AT^SPIC execute and read command refers to SIM PIN2, i.e. it does not reflect the status of SIM PIN1. This may be a problem if the user enters a wrong PIN1 and is not aware that the number of attempts left to enter SIM PIN1 is counted down.

```
+CREG: 0
at+cpin=1234
OK
+CREG: 2

+CREG: 1                                  The mobile ist properly registered to the network.
at+cpin?
+CPIN: READY                              The AT+CPIN? read command confirms that SIM
                                          PIN1 authentication was successful.
at^spic
^SPIC: 3                                  As SIM PIN1 authentication was successful, the
                                          counter relates to SIM PIN2 and correctly indicates
                                          that the user has 3 attempts to enter SIM PIN2.
OK
AT^SPIC?                                  Likewise, the read command notifies that the ME is
                                          waiting for SIM PIN2.
^SPIC: SIM PIN2
OK
at+clck="SC",0,456789                     First attempt to enter a wrong SIM PIN1.
+CME ERROR: incorrect password
at^spic
^SPIC: 3                                  SIM PIN1 authentication is still valid, and the counter
                                          relates to SIM PIN2.
at+clck="SC",0,456789                     Second attempt to enter a wrong SIM PIN1.
+CME ERROR: incorrect password
at^spic
^SPIC: 3                                  SIM PIN1 authentication is still valid, and the counter
                                          relates to SIM PIN2.
at+clck="SC",0,456789                     Third attempt to enter a wrong SIM PIN1.
+CME ERROR: incorrect password

+CREG: 0                                  SIM PIN1 authentication is no longer valid.
at^spic
^SPIC: 10                                 This time, after the SIM PIN1 code has been dis-
                                          abled, the counter indicates the status of SIM PIN1
                                          and notifies that 10 attempts are left to enter the SIM
                                          PUK.
```

To avoid conflicts we recommend to use the AT^SPIC read and write commands rather than the execute command only. The read command clearly states the currently required password, and the write command may be used to get the counter for a specific <facility>, in this case for example "P2".

5.4 AT+CLCK Facility lock

AT+CLCK can be used to lock, unlock or interrogate a network or ME <facility>. The command can be aborted when network facilities are being set or interrogated.

Syntax

Test Command

AT+CLCK=?

Response(s)

+CLCK: list of supported <facility>s
OK

Write Command

AT+CLCK=<facility>, <mode>[, <password>][, <class>]

Response(s)

if <mode> is not equal 2 and command successful:
OK
if <mode>= 2 and command successful:
+CLCK: <status>[, <class>]
[+CLCK: <status>[, <class>]]
[+CLCK: ...]
OK
ERROR
+CME ERROR: <err>

PIN	ASC0	ASC1	USB	MUX1	MUX2	MUX3	Charge	✈	Last
+	+	+	+	+	+	+	-	±	-

Reference(s)

GSM 07.07, GSM 02.04, GSM 02.88, GSM 03.88, GSM 04.88

Parameter Description

<facility>(str)

Phone security locks set by client or factory

Primarily intended for the client to take safety precautions, "SC", "PS" and "FD" can be configured individually. "PS" may also be factory set.
Parameter <class> is not applicable to security locks.
See examples below for further details.

“SC“	SIM (lock SIM cards). SIM requests password upon ME power-up and when this lock command is issued. <password>: SIM PIN1.
“PS“	Phone locked to SIM card. ME requests password when other than current SIM card is inserted. "PS" lock is frequently referred to as "phone lock", or "device lock". Accordingly, the password may be called "phone code" or "device code". The "PS" password is not associated with the PUK of the SIM card. If incorrectly entered three times, the Master Phone Code is required to lift the lock. This is an 8-digit device code associated to the IMEI number of the mobile which can only be obtained from the manufacturer of the module. Once the Master Phone Code has been acctepted, the mobile is operational, and the "PS" lock is no longer active. If needed it must be set once again.

	<password>: User defined password. It is needed before the first use of <facility> "PS" and, therefore, must first be specified with AT+CPWD or AT^SPWD, if it has not been predefined by factory settings. If set by factory (e.g. for a prepaid mobile), the password is supplied by the provider or operator.
"FD"	SIM fixed dialing memory: If the mobile is locked to "FD", only the phone numbers stored to the "FD" memory can be dialed. (Capacity of the "FD" phonebook is depending on the SIM card). <password>: SIM PIN 2. If a lock on the SIM fixed dialing memory is active, the following applies: • Outgoing voice, data or fax calls can be made only to numbers stored in the "FD" phonebook. Result code for voice, data and fax calls to numbers not stored in the "FD" phonebook is "+CME ERROR: call barred". • Access to defined Supplementary Service Call forwarding is possible only if the exact corresponding public MMI *# code for the desired service is stored in the "FD" phonebook and used with ATD. Indication is "+CME ERROR: call barred". Using Supplementary Services ATD*#code without dialing number is possible. • SMS can be sent only to phone numbers which are stored in the "FD" phonebook. Also a valid Service Center Address (international format) must be present in the "FD" phonebook to allow sending SMS at all. Indication is "+CMS ERROR: operation not allowed". • GPRS commands can be used only if the "FD" phonebook contains an entry with phone number "*99#". This single entry enables all GPRS commands, including AT commands and modem compatibility commands like "ATD*99***1#" or "ATD*98***1#". Indication is "+CME ERROR: call barred".

Factory defined SIM locks:

Typical examples of factory set SIM locks are prepaid phones or network locks, used to restrict the operation of a mobile to a specific provider or operator. The client should be aware that each of these lock types can only be unlocked if the associated password is available. For example, a mobile can be locked to accept only SIM cards from the respective provider, or even one single SIM card. Once a different SIM card is inserted the ME will prompt the client to enter a specific code. This is not the PUK of the SIM card, but usually an 8-digit code which needs to be requested from the provider.
The locks can only be set by the manufacturer and need to be agreed upon between the parties concerned, e.g. provider, operator, distributor etc. on the one side and the manufacturer on the other side. For details contact your local dealer or Cinterion Wireless Modules GmbH.
Parameter <class> is not applicable to SIM locks.
<password> and instructions for unlocking must be obtained from the network provider.

"PF"	lock Phone to the very First SIM card
"PN"	Network Personalisation
"PU"	Network subset Personalisation
"PP"	Service Provider Personalisation
"PC"	Corporate Personalisation

Supplementary Service Call Barring:

Supplementary Service "Call Barring" allows to specify conditions under which calls will be disallowed by the network.
The availability of the Supplementary Services varies with the network. To benefit from call barring the client will need to subscribe them, though a limited number of call barring types may be included in the basic tariff package.
When you attempt to set a <facility> or <class> which is not provisioned, not yet subscribed to, or not supported by the module, the setting will not take effect regardless of the response returned. The responses in these

cases vary with the network (for example "OK", "+CME ERROR: operation not allowed", "+CME ERROR: operation not supported" etc.). To make sure check the extended error response with AT+CEER and the lock status with <mode>=2.
<password>: Network password supplied from the provider or operator. Usually there is one password which applies to all call barring options. For details contact your provider.

“AO“	BAOC (Bar All Outgoing Calls)
“OI“	BOIC (Bar Outgoing International Calls)
“OX“	BOIC-exHC (Bar Outgoing International Calls except to Home Country)
“AI“	BAIC (Bar All Incoming Calls)
“IR“	BIC-Roam (Bar Incoming Calls when Roaming outside the home country)
“AB“	All Barring services (applicable only for <mode>=0)
“AG“	All outGoing barring services (applicable only for <mode>=0)
“AC“	All inComing barring services (applicable only for <mode>=0)

<mode>(num)

0	unlock
1	lock
2	query status

<status>(num)

0	lock is inactive
1	lock is active

<password>(str)

Password string used to lock and to unlock a <facility>. Length and authority for passwords depend on the <facility> in question and are therefore listed in the section on parameter <facility>. Passwords can be modified with AT+CPWD or AT^SPWD.

<class>(num)

Integer or sum of integers each representing a class of information, i.e. a bearer service, telecommunication service or bearer service group as defined in "GSM 02.04".

1	voice
2	class 2 ("data") comprises all those individual data classes between 16 and 128, that are supported both by the network and the MS. This means, a setting made for class 2 applies to all individual data classes (if supported). In addition, you can assign a different setting to a specific class. For example, you can activate Call Forwarding for all data classes, but deactivate it for data class 64, "dedicated packet access".
4	fax
8	SMS
16	data circuit sync
32	data circuit async
64	dedicated packet access
128	dedicated PAD access
1...[7]...255	combination of some of the above classes. For example, the default setting 7 represents the sum of the integers 1, 2 and 4 (voice, data and fax). The value 255 covers all classes. If parameter "class" is omitted, the default value 7 is used.

Notes

- The AT+CLCK command offers the full range of <class> parameters according to the GSM specifications. However, when you attempt to use a service option which is not provisioned or not yet subscribed to, the setting will not take effect regardless of the response returned.
  The responses in these cases vary with the network (for example "OK", "Operation not allowed", "Operation not supported" etc.). To make sure check the extended error response with AT+CEER and the lock status with <mode>=2.
- The command has been implemented with the full set of <class> parameters according to GSM 07.07. For actual applicability of a desired Call barring service to a specific service or service group (a specific <class> value) please consult table A.1 of GSM 02.04.
- If an outgoing Fax or Data Call is rejected due to an active "call barring" supplementary service, the call will be terminated with result code NO CARRIER.
  Under the same conditions, an outgoing Voice call will be terminated with result code NO DIALTONE.
- If an invalid <password> is entered several times in succession, a delay incremented after each failed attempt will increase the time to wait before the input of the <password> is accepted. To avoid blocking the serial interface the running AT+CLCK command is aborted after a short timeout and returns "+CME ERROR: unknown" (+CME ERROR: 100). If then the AT+CLCK command is issued once again execution is denied with "+CME ERROR: operation temporary not allowed" (+CME ERROR: 256). For details regarding the delay see Section 5.1.1, What to do if PIN or password authentication fails?.
- If the user tries to set a lock although it is already active or, the other way round, tries to unlock an inactive lock, the response will be OK, but the <password> will not be checked or verified.
- In the airplane mode the write command version for the network related <facility> (AO, OI, OX, AI, IR, AB, AG and AC) is not supported. For remaining facilities the command is fully functional then.

Examples

EXAMPLE 1

Lock SIM card (<facility>= "SC")

AT+CLCK="SC",1,"9999"	The "SC" parameter enables or disables the SIM PIN authentication (PIN 1) when you power up the GSM engine
OK	SIM card locked. As a result, SIM PIN 1 must be entered to enable ME to register to the GSM network.

AT+CLCK="SC",0,"9999"	Unlocks SIM card.
OK	When powered up, ME registers to the GSM network without requesting SIM PIN1. Note: Depending on the services offered by the provider, this feature is not supported by all SIM card types. If so, the command returns ERROR when you attempt to unlock the card.

To query the status of the SIM card lock:

AT+CLCK="SC",2	Query the status of SIM card lock.
+CLCK: 1	SIM card is locked. SIM PIN1 must be entered to enable ME to register to the GSM network.
OK	

EXAMPLE 2

Phone lock (<facility>="PS")

AT+CPIN? OK	Make sure that PIN1 authentication is valid.

To lock the ME to the currently inserted SIM card, first specify a password for <facility> "PS":

AT+CPWD="PS",,"1234" OK	If "PS" lock has not been set before: enter new password.

Optionally, if "PS" password was defined before, change existing password:

AT+CPWD="PS","1234","3333" OK	To replace existing "PS" password: Enter old and new password.

Then, activate the Phone Lock:

AT+CLCK="PS",1,"3333" OK	Locks the mobile to the current SIM card.

To operate the mobile with the SIM card for which "PS" lock was activated:

AT+CPIN? +CPIN: SIM PIN OK AT+CPIN="9999" OK	No additional password is required for operation (SIM recognized by mobile).

To operate the mobile with other SIM card than the one used for the "PS" lock:
Enter SIM PIN of present card, followed by "PS" lock password.

AT+CPIN? +CPIN: SIM PIN OK AT+CPIN="1111" OK	PIN authentication accepted.
AT+CPIN? +CPIN: PH-SIM PIN OK AT+CPIN="3333" OK	"PS" lock password is required. "PS" Lock password has been accepted. ME is fully operational now.

To deactivate the Phone Lock:

AT+CLCK="PS",0,"3333" OK	Phone Lock password has to be provided again. Now the mobile can be used with any SIM card, without the need of the phone lock password.

5.5 AT^SLCK Facility lock

AT^SLCK provides the "Facility lock" function as defined for the GSM 07.07 command AT+CLCK. The command can be used to lock, unlock or interrogate a network or ME <facility>.
AT^SLCK is, in every respect, identical with AT+CLCK, except that the command syntax and response prefix is "^SLCK" instead of "+CLCK". For further details please refer to AT+CLCK.
The command can be aborted when network facilities are being set or interrogated.

Syntax

Test Command

AT^SLCK=?

Response(s)

^SLCK: list of supported <facility>s
OK

Write Command

AT^SLCK=<facility>, <mode>[, <password>][, <class>]

Response(s)

if <mode> is not equal 2 and command successful:
OK
if <mode>= 2 and command successful:
^SLCK: <status>, <class>
[^SLCK: <status>, <class>]
[^SLCK: ...]
OK
If error is related to ME functionality
ERROR
+CME ERROR: <err>

PIN	ASC0	ASC1	USB	MUX1	MUX2	MUX3	Charge	✈	Last
+	+	+	+	+	+	+	-	±	-

Reference(s)

GSM 07.07, GSM 02.04, GSM 02.88, GSM 03.88, GSM 04.88

Note

- In the airplane mode the write command version for the network related <facility> (AO, OI, OX, AI, IR, AB, AG and AC) is not supported. For remaining facilities the command is fully functional then.

5.6 AT+CPWD Change Password

AT+CPWD allows to define a new password for a password protected <facility> lock function. Each password is a string of digits, the length of which varies with the associated <facility>. The test command returns a list of pairs which represent the available facilities and the maximum length of the associated password. See AT commands AT+CLCK and AT^SLCK for more information on the various lock features.

Specifically the command can be used to

- change PIN1 or PIN2,
- change the password supplied from your provider for the "call barring" supplementary service,
- set individual phone security passwords,
- enter the unblocking key (Master Phone Code) to restore a disabled "PS" password.

To delete a password use the following syntax: at+cpwd=<facility>,<old password>

Syntax

Test Command

AT+CPWD=?

Response(s)

+CPWD: list of supported (<facility>, <password length>)
OK

Write Command

AT+CPWD=<facility>, <old password>[, <new password>]

Response(s)

New password has been registered for the facility lock function.
OK
If parameter <old password> was not correct:
+CME ERROR: 16 (+CME ERROR: incorrect password)
If the password for the selected <facility> has been invalidated due to too many failed attempts:
+CME ERROR: ...
If error is related to ME functionality:
+CME ERROR: <err>

PIN	ASC0	ASC1	USB	MUX1	MUX2	MUX3	Charge	✈	Last
+	+	+	+	+	+	+	-	±	-

Reference(s)

GSM 07.07

Parameter Description

<facility>(str)

Phone security locks set by client or factory:

Primarily intended for the client to take safety precautions, passwords "SC" (SIM PIN) and "P2" (SIM PIN2) are usually predefined, but can be configured individually. The password for lock facility "PS" may also be factory set.

“SC“	SIM PIN. SIM requests password upon ME power-up and when this lock command is issued. If incorrectly entered three times, the SIM PUK is required to perform authentication. Input of the SIM PUK password is possible only with AT command AT+CPIN or ATD. For further details please refer to Section 5.1.1, What to do if PIN or password authentication fails?. <password length>: 4 to 8 digits.

“PS“	Phone locked to SIM card. ME requests password when other than current SIM card is inserted. "PS" lock is frequently referred to as "phone lock", or "device lock". Accordingly, the password may be called "phone code" or "device code". The "PS" password is not associated with the PUK of the SIM card. It must be defined before the first use of <facility> "PS" with AT+CLCK. <password length>: 4 digits. If incorrectly entered three times, the Master Phone Code is required to lift the lock. This Unblocking procedure is performed with AT+CPWD using the following parameters: <facility>="PS", <old password>= Master Phone Code (to be obtained from the module manufacturer), and <new password>= the new phone code ("PS" password for lock facility), if desired. Mind that successful PIN authentication is a prerequisite for use of AT command AT+CPWD. If Pin authentication has not been completed, input of the Master Phone code password is possible only with AT command AT+CPIN or ATD. For further detail please refer to Section 5.1.1, What to do if PIN or password authentication fails?. Once the Master Phone Code has been acctepted, the mobile is operational, and the "PS" lock is no longer active. If needed it must be set once again with AT+CLCK.
“P2“	SIM PIN 2, e.g. required for authentication with facility lock "FD" (cf. AT+CLCK). If incorrectly entered three times, the SIM PUK 2 is required to perform authentication. Input of the SIM PUK 2 password is possible only with AT command AT+CPIN2 or ATD. For further detail please refer to Section 5.1.1, What to do if PIN or password authentication fails?. <password length>: 4 to 8 digits.

Factory defined SIM locks:

Typical examples of factory set SIM locks are prepaid phones or network locks, used to restrict the operation of a mobile to a specific provider or operator. The client should be aware that each of these lock types can only be unlocked if the associated password is available. For example, a mobile can be locked to accept only SIM cards from the respective provider, or even one single SIM card. Once a different SIM card is inserted the ME will prompt the client to enter a specific code. This is not the PUK of the SIM card, but usually an 8-digit code which needs to be requested from the provider.
The locks can only be set by the manufacturer and need to be agreed upon between the parties concerned, e.g. provider, operator, distributor etc. on the one side and the manufacturer on the other side. For details contact your local dealer or Cinterion Wireless Modules GmbH.

“PF“	Lock Phone to the very First SIM card
“PN“	Network Personalisation
“PU“	Network subset Personalisation
“PP“	Service Provider Personalisation
“PC“	Corporate Personalisation

Supplementary Service Call Barring:

Supplementary Service "Call Barring" allows to specify conditions under which calls will be disallowed by the network.
The availability of the Supplementary Services varies with the network. To benefit from call barring the client will need to subscribe them, though a limited number of call barring types may be included in the basic tariff package.
<password length>: The Network Password needs to be supplied from the network provider or network operator. Usually there is one 4 digit password which applies to all call barring options. For details contact your provider.

“AO“	BAOC (Bar All Outgoing Calls)
“OI“	BOIC (Bar Outgoing International Calls)
“OX“	BOIC-exHC (Bar Outgoing International Calls except to Home Country)
“AI“	BAIC (Bar All Incoming Calls)

“IR“	BIC-Roam (Bar Incoming Calls when Roaming outside the home country)
“AB“	All Barring services
“AG“	All outGoing barring services
“AC“	All inComing barring services

`<password length>`(num)

4...8	Length of password. The range of permitted length for a password depends on the associated `<facility>`. It is available from the test command response, or in the description of parameter `<facility>`.

`<old password>`(str)

Password specified for the facility.
Parameter `<old password>` can be ignored if no old password was allocated to the facility.
Take into account that a password may have already been set by factory, or that the service is subject to a password issued by the provider. See notes above or contact provider.

`<new password>`(str)

New password. Mandatory, if `<old password>` was an unblocking key (such as the Master Phone Code).

Notes

- When changing PIN2 (`<facility>`="P2") it is recommended to check the new state of PIN2 by using the `AT+CPIN2` command.
- In the airplane mode the write command version for the network related `<facility>` (AO, OI, OX, AI, IR, AB, AG and AC) is not supported. For remaining facilities the command is fully functional then.

Examples

EXAMPLE 1

To change PIN2

`AT+CPWD="P2","0000","8888"`	(where "0000" = old PIN2 and "8888" = new PIN2)
`OK`	PIN2 Password has been changed to "8888"

EXAMPLE 2

To set password used to enable or disable barring of all outgoing calls:

`AT+CPWD="AO","0000","3333"`	Requests the network to change the password for supplementary service "call barring".
`OK`	Usually this request will affect all barring services, even though the request is issued for Supplementary Service BAOC ("Barring of all outgoing calls") only. Refer to the respective network provider for detail.

EXAMPLE 3

Handling of the "PS" lock password

`AT+CMEE=2`	Enable text output of CME Error information
`AT+CPWD="PS","1111","2222"`	(where "1111" = old password and "2222" = new password)
`OK`	Password for facility "PS" is now "2222"
`AT+CPWD="PS","1111","2222"`	Repeat command to provoke error "incorrect password"
`+CME ERROR: incorrect password`	("1111" is no longer the correct password)

EXAMPLE 4

To specify a new "PS" lock password, after the old password was disabled (e.g. after three failed attempts to change the "PS" password): use the master phone code.
CAUTION: THIS TEST SHOULD BE PERFORMED ONLY IF THE CORRECT MASTER PHONE CODE FOR THE INDIVIDUAL ME USED IS DEFINITELY AVAILABLE! Otherwise the module used will be rendered useless until the correct master phone code is entered!:

```
AT+CPWD="PS","12345678","1111"
```

where 12345678 is the Master Phone Code and 1111 is the new password. You may also use <new password> to restore the former disabled password.

```
OK
```

Alternatively, without giving a new password:

```
AT+CPWD="PS","12345678"
```

(where 12345678 is the Master Phone Code). Deactivates the present phone lock.

```
OK
```

5.7 AT^SPWD Change Password

The AT^SPWD command comprises all functions of the AT+CPWD command. Apart from the different prefixes "^SPWD" and "+CPWD", the major difference is that the <facility> list of AT^SPWD includes the additional "CM" password dedicated to the Customer SIM Lock. Set with the command AT^SCSL, this type of lock allows the application manufacturer to lock a mobile to specific operators.

The Customer SIM Lock feature is designed to be configurable during the production of the mobile application. Therefore, to program the "CM" password, the AT^SPWD write command can be used no matter whether the SIM is inserted or PIN authentication has been done. Opposite to that, passwords for all other facilities can only be edited if the SIM is present and PIN authentication completed.

IMPORTANT: Please note that, even though there is no need for a factory set Customer SIM Lock, you are strongly advised to specify at least a "CM" password, avoiding that end users ever have a chance to activate this lock type.

Each password is a string of digits the length of which varies with the associated facility. The test command returns a list of pairs which represent the available facilities and the maximum length of the associated password.

See also AT commands AT+CLCK and AT^SLCK as well as AT^SCSL for more detail on the various lock features.

Syntax

Test Command

AT^SPWD=?

Response(s)

^SPWD: list of supported (<facility>, <password length>)
OK

Write Command

AT^SPWD=<facility>[, <old password>][, <new password>]

Response(s)

New password has been registered for the facility lock function.
OK
If parameter <old password> was not correct:
+CME ERROR: 16 (+CME ERROR: incorrect password)
If the password for the selected <facility> has been invalidated due to too many failed attempts:
+CME ERROR: ...
In case of trying to set a "CM" password although another type of factory set SIM lock is already active:
+CME ERROR: operation not supported.
If error is related to ME functionality:
+CME ERROR: <err>

PIN	ASC0	ASC1	USB	MUX1	MUX2	MUX3	Charge	✈	Last
±	+	+	+	+	+	+	-	±	-

Parameter Description

<facility>(str)	
"CM"	Password used as Customer Mastercode for Customer SIM Lock. Defining the "CM" password allows the application manufacturer to set a Customer SIM Lock by activating a Network Personalization ("PN") with the AT^SCSL command. The "CM" password is mandatory for each operation with AT^SCSL. <password length> of "CM": 8 digits. To delete the "CM" password use the following syntax: AT^SPWD=<facility>,<old password>. Please note that this action will delete all personalisation data programmed by the manufacturer with AT^SCSL (including the operator list).

A description of all other passwords commonly supported by AT+CPWD and AT^SPWD can be found in Section 5.6, AT+CPWD. The "CM" password cannot be edited with AT+CPWD.

Notes

- When changing the PIN2 (<facility>="P2") it is recommended to check the new state of PIN2 using the AT+CPIN2 command.
- In the airplane mode the write command version for the network related <facility> (AO, OI, OX, AI, IR, AB, AG and AC) is not supported. For remaining facilities the command is fully functional then.

Examples

EXAMPLE 1

To specify the "CM" password required as Customer Mastercode for the Customer SIM Lock:

AT^SPWD="CM"	Check if the Customer Mastercode was already set.
ERROR	No, it was not.
AT^SPWD="CM", ,"12345678"	Specify a new Customer Mastercode (where <old password> is omitted and <new password>"12345678" = new Customer Mastercode)
OK	The Customer Mastercode has been set to "12345678".
AT^SPWD="CM"	Checking again.
OK	Yes, it is active now.

EXAMPLE 2

To change the Customer Mastercode:

AT^SPWD="CM","12345678","44444444"	(where "12345678" = old Customer Mastercode, and "44444444" = new Customer Mastercode).
OK	The Customer Mastercode has been changed from "12345678" to "44444444".

EXAMPLE 3

To delete the Customer Mastercode:

AT^SPWD="CM","44444444"	Delete the Customer Mastercode by omitting <new password> and entering only the <old password> "44444444".
OK	The Customer Mastercode as well as all personalisation data programmed by the manufacturer with AT^SCSL were deleted.

5.8 AT^SCSL Customer SIM Lock

The AT^SCSL command is designed to manage the Customer SIM Lock feature. This feature allows application manufacturers to lock a mobile to specific operators by activating a Network Personalization ("PN"). If the lock is enabled the mobile will accept only SIM cards from the given operators.

The Customer SIM Lock is protected by two different passwords:

- <password> = Network Personalisation password "CM" defined with AT^SPWD and necessary for programming the Customer SIM Lock with AT^SCSL.
- <PUK> = Lock/Unlock Code defined with AT^SCSL and used to set the Customer SIM Lock with AT^SCSL. Also used to deactivate a given lock or activate a new one via AT+CLCK or AT^SLCK. The PUK may be provisioned to the end user.

The AT^SCSL write command serves to configure a Customer SIM Lock and to query the current settings.

Syntax

Test Command

```
AT^SCSL=?
```

Response(s)

```
OK
```

Write Command

```
AT^SCSL=<facility>, <action>, <password>[, <PUK>, <data>]
```

Response(s)

```
OK
ERROR
+CME ERROR: <err>
```

If <action>= 2 and command successful:

```
^SCSL: <data>[:<data>:<data>: ...]
```

If <action>= 2 and operator list is empty:

```
^SCSL:
```

PIN	ASC0	ASC1	USB	MUX1	MUX2	MUX3	Charge	✈	Last
-	+	+	+	+	+	+	-	+	-

Parameter Description

<facility>(str)

“PN“	Network Personalisation (= Customer SIM Lock)

<action>(num)

Set or remove a Customer SIM Lock, or list the locks currently activated.

0	Remove the given Customer SIM Lock from ME. Required parameters: <facility>="PN", <action>=0, <password>. Removing the Customer SIM Lock deletes both the <PUK> and all <data>, i.e. the entire list of operators.
1	Write Customer SIM Lock data to the ME and activate the lock. Required parameters: <facility>="PN", <action>=1, <password>, <PUK>, <data>.
2	Retrieve the list of operators the ME is currently locked to. Required parameters: <facility>="PN", <action>=2, <password>.

<password>(str)

Password for programming the Customer SIM Lock.
8-digit "CM" password for the facility "PN" that needs to be created with AT^SPWD (see note below for further details). This password is mandatory for each operation performed with AT^SCSL.

<PUK>(str)

PUK created and required when entering the Customer SIM Lock data with AT^SCSL, i.e. if <action>=1. Also used to deactivate a given "PN" lock or to activate a new "PN" lock for another SIM card via AT+CLCK or AT^SLCK.
The length of the <PUK> is also 8 digits.
Each time the AT^SCSL write command is issued with parameter <action>=1 you are free to use the same <PUK> or to set a new one. In any case, a new <PUK> overwrites the previous one.

<data>(str)

Data of the allowed network operators.
Each operator code consists of the "Mobile Country Code" MCC and the "Mobile Network Code" MNC, both separated by a dot, e.g. MCC1.MNC1. If more than one operator is entered on the same line, then a colon must be set between each operator code, e.g. MCC1.MNC1:MCC2.MNC2:MCC3.MNC3. For example, for the three operators T-Mobile D, Vodafone D2 and E-Plus you would enter the following data: 262.01:262.02:262.03
Note that each time the AT^SCSL write command is executed using the parameter <action>=1 the existing operator codes will not be overwritten, but all new data will be added to the list. This applies no matter whether the same operator code is already listed, i.e. entering the same operator again causes double entries.
The maximum number of entries in the operator list is 50.

Notes

- The use of the Customer SIM lock features may be restricted by existing facility locks. For example it is not possible to enable Customer SIM lock while the "PS" device lock is in place.
- All parameters of AT^SCSL as well as the "CM" password of AT^SPWD can be used no matter whether or not the SIM card is inserted or PIN authentication has been done. This allows the application manufacturer to set the "CM" password and activate the Customer SIM Lock during the production process.
- The Customer SIM Lock takes effect after the AT^SCSL write command was successfully executed with parameter <action>=1. Then, after the reboot, the mobile will accept only SIM cards from the supported operators.
- To remove the Customer SIM Lock use the write command AT^SCSL with <action>=0 and <password>: AT^SCSL="PN",0,password. This will delete both the <PUK> and the list of operators. The mobile will accept any SIM card.
- Another way to operate the mobile with other SIM cards is to deactivate the Customer SIM Lock using the command AT+CLCK="PN",0,PUK. This will delete the list of operators specified with the Customer SIM Lock, but the <PUK> created for the Customer SIM Lock remains valid. The mobile will accept any SIM card.
- If the Customer SIM Lock is deactivated and, therefore, operable with any SIM card, the end user may use the <PUK> to set a new SIM lock. To do so, it is necessary to enter the command AT+CLCK="PN",1,PUK first, then insert a different SIM card and finally restart the mobile. When restarted, the mobile will read out and accept the list of operators of the currently inserted SIM card. As a result, a new Customer SIM Lock takes effect for the operator(s) listed on this SIM card.
- If the Customer SIM Lock is active, but the end user inserts an unsupported SIM card and enters PIN1 the mobile returns OK, although access to SIM related commands (such as dialing out, access to phonebooks, SMS etc.) will be denied. If then the read command AT+CPIN is executed the mobile will request the PH-NET PUK. In this case, you have two options: Use the AT+CPIN command to enter the correct <PUK> of the Customer SIM Lock. After this, the mobile can be operated with the new SIM card. As an alternative, re-insert the correct SIM card associated with the Customer SIM Lock and deactivate the lock via AT+CLCK="PN",0,PUK.
- If an invalid <password> or <PUK> is entered several times in succession, a delay incremented after each failed attempt will increase the time to wait before the next input is accepted. The delay follows the same timing algorithm specified for the PH-SIM PUK (Master Phone Code). For details regarding the delay see Section 5.1.1, What to do if PIN or password authentication fails?.

Examples

EXAMPLE 1

Prerequisite for using the AT^SCSL command is a valid "CM" password created with AT^SPWD. Therefore, first check the "CM" password. A more detailed example can be found in Section 5.7, AT^SPWD.

AT^SPWD="CM",, OK	Check that the "CM" password was already set. Yes, the "CM" password is valid.

EXAMPLE 2

To check, configure and remove a "PN" lock (= Customer SIM Lock):

AT^SCSL="PN",2,44444444 ^SCSL:	Check the current status of the Customer SIM Lock. 44444444 is the "CM" password created with AT^SPWD. Operator list is still empty, Customer SIM Lock has not yet been set.
OK AT^SCSL="PN",1,44444444,12345678,262.01:262.02	Set a "PN" Lock, where 44444444 = "CM" password, 12345678 = PH-NET PUK, 262.01 = MCC/MNC of German operator T-Mobile D and 262.02 = MCC/MNC of Vodafone D2.
OK AT^SCSL="PN",2,44444444 ^SCSL: 262.01:262.02	Check again. The mobile is locked to the two network operators T-Mobile D and Vodafone D2.
OK AT^SCSL="PN",1,44444444,12345678,262.03	Add another operator (262.03 = MCC/MNC of German network operator E-Plus).
OK AT^SCSL="PN",1,44444444,11223344,262.04	Add another operator. In this case, a new PH-NET-PUK was used. Keep in mind that the new password overwrites the old one.
OK AT^SCSL="PN",0,44444444 OK	Remove the Customer SIM Lock. Keep in mind that this action deletes the entire list of network operators contained in <data>. As a result, the mobile will accept any SIM card.

EXAMPLE 3

If the Customer SIM Lock is active, but the user inserts a different SIM card not supported by the list of operators defined in <data> the <PUK> must be at hand:

AT^SCSL="PN",2,44444444 ^SCSL: 262.01:262.02	For the purpose of this example, we check the current status of the Customer SIM Lock. The mobile lis locked to the German operators T-Molile D and Vodafone D2.
OK AT+CPIN=1111	PIN1 is accepted and the mobile is operable, except for SIM related AT commands.
OK AT+CMGF=1	AT command that does not require SIM authentication.
OK AT+CPBS? +CME ERROR: network personalisation PUK required AT+CPIN? +CPIN: PH-NET PUK OK	Attempt to use a phonebook command. Access to phonebook fails because of lack of SIM data. Check status of PIN authentication. The mobile is waiting for the PH-NET-PUK.

AT+CPIN=11223344 OK	PH-NET PUK is given with AT+CPIN. This action deletes the entire operator list and, thus, removes the Customer SIM Lock.
AT+CPIN? +CPIN: READY OK	Query status of PIN authentication.
AT^SCSL="PN",2,44444444 ^SCSL: OK	Check the status of the Customer SIM Lock. Entire operator list is empty, Customer SIM Lock is no longer active.

6. Identification Commands

The AT Commands described in this chapter allow the external application to obtain various identification information related to the TC65i and linked entities.

6.1 ATI Display product identification information

The ATI execute command delivers a product information text.
The 'Revision' information consists of the following parts: Version xx and variant yy of software release.

Syntax

Exec Command

ATI

Response(s)

Cinterion
TC65i
REVISION xx.yy
OK

Exec Command

ATI[<value>]

Response(s)

OK

Exec Command

ATI1

Response(s)

Cinterion
TC65i
REVISION xx.yy
A-REVISION xx[.zzz.cc]
OK

PIN	ASC0	ASC1	USB	MUX1	MUX2	MUX3	Charge	✈	Last
-	+	+	+	+	+	+	-	+	-

Reference(s)

V.250

Parameter Description

<value>(num)

Values are not supported and only return OK.

Notes

- "A-REVISION xx.zzz.cc" information consists of the following parts:
  Application Revision Number 'xx' as an assignment to customer application.
  Application Revision Version 'zzz' as an assignment to changes in customer application.
  'cc' as an additional number, e.g. defined by customer.
- "A-REVISION 01" is returned as an assignment to no customer application.

6.2 AT+CGMI Request manufacturer identification

AT+CGMI returns a manufacturer identification text. See also: AT+GMI.

Syntax

Test Command
AT+CGMI=?
Response(s)
OK

Exec Command
AT+CGMI
Response(s)
Cinterion OK

PIN	ASC0	ASC1	USB	MUX1	MUX2	MUX3	Charge	✈	Last
-	+	+	+	+	+	+	-	+	-

Reference(s)
GSM 07.07

6.3 AT+GMI Request manufacturer identification

AT+GMI returns a manufacturer identification text. See also: AT+CGMI.

Syntax

Test Command
AT+GMI=?
Response(s)
OK

Exec Command
AT+GMI
Response(s)
Cinterion OK

PIN	ASC0	ASC1	USB	MUX1	MUX2	MUX3	Charge	✈	Last
-	+	+	+	+	+	+	-	+	-

Reference(s)
V.250

6.4 AT+CGMM Request model identification

AT+CGMM returns a product model identification text. Command is identical with AT+GMM.

Syntax

Test Command
AT+CGMM=?
Response(s)
OK

Exec Command
AT+CGMM
Response(s)
TC65i OK

PIN	ASC0	ASC1	USB	MUX1	MUX2	MUX3	Charge	✈	Last
-	+	+	+	+	+	+	-	+	-

Reference(s)
GSM 07.07

6.5 AT+GMM Request model identification

AT+GMM returns a product model identification text. Command is identical with AT+CGMM.

Syntax

Test Command
AT+GMM=?
Response(s)
OK

Exec Command
AT+GMM
Response(s)
TC65i OK

PIN	ASC0	ASC1	USB	MUX1	MUX2	MUX3	Charge	✈	Last
-	+	+	+	+	+	+	-	+	-

Reference(s)
V.250

6.6 AT+CGMR Request revision identification of software status

AT+CGMR delivers a product firmware version identification. Command is identical with AT+GMR.

Syntax

Test Command
AT+CGMR=?
Response(s)
OK

Exec Command
AT+CGMR
Response(s)
REVISION <xx.yy> OK

PIN	ASC0	ASC1	USB	MUX1	MUX2	MUX3	Charge	✈	Last
-	+	+	+	+	+	+	-	+	-

Reference(s)
GSM 07.07

Parameter Description

<xx.yy>(str)
Version xx and variant yy of software release.

6.7 AT+GMR Request revision identification of software status

AT+GMR delivers a product firmware version identification. Command is identical with AT+CGMR.

Syntax

Test Command
AT+GMR=?
Response(s)
OK

Exec Command
AT+GMR
Response(s)
REVISION <xx.yy> OK

PIN	ASC0	ASC1	USB	MUX1	MUX2	MUX3	Charge	✈	Last
-	+	+	+	+	+	+	-	+	-

Reference(s)
V.250

Parameter Description

<xx.yy>(text)
Version xx and variant yy of software release.

6.8 AT+CGSN Request International Mobile Equipment Identity (IMEI)

AT+CGSN delivers the International Mobile Equipment Identity (IMEI). Command is identical with: AT+GSN.

Syntax

Test Command
AT+CGSN=?
Response(s)
OK

Exec Command
AT+CGSN
Response(s)
<sn> OK

PIN	ASC0	ASC1	USB	MUX1	MUX2	MUX3	Charge	✈	Last
-	+	+	+	+	+	+	-	+	-

Reference(s)
GSM 07.07

Parameter Description

<sn>(str)

International Mobile Equipment Identity (IMEI) used to identify a GSM mobile equipment to the GSM network

6.9 AT+GSN Request International Mobile Equipment Identity (IMEI)

AT+GSN delivers the International Mobile Equipment Identity (IMEI). Command is identical with AT+CGSN

Syntax

Test Command
AT+GSN=?
Response(s)
OK

Exec Command
AT+GSN
Response(s)
<sn> OK

PIN	ASC0	ASC1	USB	MUX1	MUX2	MUX3	Charge	✈	Last
-	+	+	+	+	+	+	-	+	-

Reference(s)
V.250

Parameter Description

<sn>(str)

International Mobile Equipment Identity (IMEI) used to identify a GSM mobile equipment to the GSM network.

6.10 AT+CIMI Request International Mobile Subscriber Identity (IMSI)

AT+CIMI delivers the International Mobile Subscriber Identity (IMSI). The IMSI permits the TE to identify the individual SIM attached to the ME.

Syntax

Test Command
AT+CIMI=?
Response(s)
OK

Exec Command
AT+CIMI
Response(s)
<imsi> OK ERROR +CME ERROR: <err>

PIN	ASC0	ASC1	USB	MUX1	MUX2	MUX3	Charge	✈	Last
+	+	+	+	+	+	+	-	+	-

Reference(s)
GSM 07.07

Parameter Description

<imsi>(str)

International Mobile Subscriber Identity (string without quotes).

7. Call related Commands

The AT Commands described in this chapter are related to Mobile Originated (MOC, i.e. outgoing) Calls and Mobile Terminated (MTC, i.e. incoming) Calls.

7.1 Call Status Information

For Circuit switched calls, including voice, fax and data calls, call status information is available with URC "+CIEV: call" (configurable via AT commands AT+CIND and AT+CMER) or - in more detail - from the list of current calls. This list can be displayed on request via at commands AT+CLCC and AT^SLCC. It can also be issued by the ME in the form of an unsolicited result code "^SLCC" if configured with AT^SLCC and AT+CMER.
URC "+CIEV: call" and URC "^SLCC" can be configured using AT command AT^SCFG. An overview of the possible configurations and their consequences for the availability of call status information will be given here.

Generally speaking, the call status values recognized by the ME are as follows:

- active
- held
- dialing (MOC)
- alerting (MOC)
- incoming (MTC)
- waiting (MTC)
- terminating: The call is not active anymore, but inband information is still available.
- dropped: The call has been suspended by the network, but may be resumed later.

The values "terminating" and "dropped" are not standardized for AT command AT+CLCC, and therefore only available for command AT^SLCC. A call in any of these two states will not appear in the list of current calls as displayed with AT+CLCC.
A call that is not recognized by the ME is considered to be in "unknown" state.
Some networks may schedule a traffic channel for a call that is not yet in the "active" state. This is reflected in parameter <traffic channel assigned> of AT command AT^SLCC and the corresponding URC.
Depending on the value of AT^SCFG setting <succ>, Indicator "+CIEV" will be issued (if configured with AT+CIND and AT+CMER)

- when a state transition ends in state "active" or in state "unknown"
  (if AT^SCFG setting <succ>="restricted").
- when any state transition (including transitions beginning or ending in state "unknown") occurs in the list of active calls, or when a traffic channel is established
  (if AT^SCFG setting <succ>="verbose").

The indicator value for indicator "+CIEV: call" will be "1" if at least one call is in states "held" or "active", and "0" otherwise.

Depending on the value of AT^SCFG setting <sucs>, Indicator "^SLCC" will be issued (if configured with write command AT^SLCC and AT+CMER)

- when a state transition ends in state "active" or in state "unknown" (if AT^SCFG setting <sucs>="restricted")
- when any state transition (including transitions beginning or ending in state "unknown") occurs in the list of active calls, or when a voice channel is established (if AT^SCFG setting <sucs>="verbose").

Due to compatibility considerations, the powerup default for AT^SCFG setting <succ> is "restricted", offering compatibility to the standard behaviour of indicator "+CIEV: call", while the default for setting <sucs> is "verbose".
In order to see the URCs, event reporting for both indicators must be explicitly configured with the appropriate AT commands.

7.2 ATA Answer a call

Syntax

Exec Command

`ATA`

Response(s)

In case of data call, if successfully connected (TA switches to data mode):

`CONNECT <text>`

In case of voice call, if successfully connected:

`OK`

When TA returns to command mode after call release:

`OK`

If no connection:

`NO CARRIER`

PIN	ASC0	ASC1	USB	MUX1	MUX2	MUX3	Charge	✈	Last
+	+	+	+	+	+	+	-	-	-

Reference(s)

V.250

Command Description

TA causes remote station to go off-hook (e.g. answer call).

Parameter Description

`<text>`(str)

Connection status

output only if `ATX` parameter setting with value greater 0. Connection speed values:

“300“

“1200“

“2400“

“4800“

“9600“

“14400“

Notes

- Any additional commands on the same command line are ignored.
- The command may be aborted generally by receiving a character during execution. It can't be aborted in some connection setup states, such as handshaking.
- If `AT+FCLASS` setting is 1 or 2, all incoming calls will be answered as fax calls, when ATA is issued on multiplexer channel 1 resp. ASC0. For calls explicitly signalled as voice or data calls, this procedure will fail with result code "NO CARRIER", but the call in question will continue to ring.
  It is possible to change the setting for `AT+FCLASS` to 0 while the call is ringing, and accept the call normally afterwards with `ATA`.
- The ATA command may be used also to accept a network request for a PDP context activation (see `ATA`).
- See also `ATX` for `<text>`.
- If an incoming call is no longer available (already disconnected/hanged up)a "NO CARRIER" result code will be given.

7.3 ATD Mobile originated call to specified number

Syntax

Exec Command

ATD<n>[<mgsm>][;]

Response(s)

If no dialtone (parameter setting ATX2 or ATX4):
NO DIALTONE
If busy (parameter setting ATX3 or ATX4):
BUSY
If a connection cannot be set up:
NO CARRIER
NO DIALTONE
If successfully connected and non-voice call (TA switches to online data mode):
CONNECT <text>
When TA returns to command mode after call release:
OK
If successfully connected and voice call:
OK

PIN	ASC0	ASC1	USB	MUX1	MUX2	MUX3	Charge	✈	Last
±	+	±	+	+	±	±	-	-	-

Reference(s)

V.250

Command Description

This command can be used to set up outgoing voice, data or fax calls. It also serves to control Supplementary Services. The termination character ";" is mandatory to set up voice calls or to send *# codes for Supplementary Services. It must not be used for data and fax calls.

Additional notes on the responses returned after dialing with ATD:

- For voice calls, you have the choice of two different response modes that can be selected with AT^SM20:
  AT^SM20=1 (factory default) causes the ME to respond once the call setup is completed either successfully ("OK") or unsuccessfully ("NO CARRIER", "NO DIAL TONE", "BUSY").
  AT^SM20=0 causes the ME to return "OK" immediately after dialing was completed (i.e. before call setup terminates successfully or unsuccessfully).
- For data connections, call setup always terminates when the call has been established (indicated by the result code "CONNECT <text>"), or when it fails (indicated by "NO CARRIER"). The settings of AT^SM20 do not apply.

Different call release indications:

- Upon termination, an outgoing fax or data call may show a different result code than a voice call would show under identical conditions. In order to track down the actual reason for call termination, AT+CEER or ATS18 should be used for all applicable connections.

Using ATD during an active call:

- When a user originates a second voice call while there is already an active voice call, the first call will automatically put on hold. The second call attempt is acknowledged with "OK" immediately after dialing with ATD has completed, without relation to a successful call setup. In case of failure, the additional result codes "NO CARRIER", "NO DIAL TONE", "NO CARRIER" will be presented afterwards (see example below).

Parameter Description

<n>(text)

String of dialing digits and optional V.250 modifiers: 0-9, *, #, +, A, B, C
The following V.250 modifiers are ignored: ,(comma), T, P, !, W ,@

<mgsm>(str)

String of GSM modifiers:
I Activates CLIR (disables presentation of own phone number to called party)
i Deactivates CLIR (enables presentation of own phone number to called party)
G Activate Closed User Group explicit invocation for this call only.
g Deactivate Closed User Group explicit invocation for this call only.

Notes

- The command may be aborted generally when receiving a character during execution. It cannot be aborted in some connection setup states, such as handshaking.
- Parameter "I" and "i" only if no *#-code is within the dial string.
- <mgsm> is not supported for data calls.
- <n> is default for last number that can be dialled by ATDL.
- See also ATX for <text>.
- If ATD is used with a USSD command (e.g. ATD*100#;) an AT+CUSD=1 is executed implicitly (see AT+CUSD).
- Parameter 'G' or 'g' will be ignored if Closed User Group was already activated, respectively deactivated with AT+CCUG command before. Call by call invocation of CUG uses the settings provisioned by the provider or, if available, the settings of the parameters <index> and <info> made with AT+CCUG.
- The ME is equipped with a "Blacklist" function according to GSM02.07 Annex A:
  After a predefined number of failed call attempts, the dialed number is entered into a read-only phonebook called "blacklist" (phonebook "BL"). Call attempts to numbers contained in the blacklist will be barred by ME and not signalled to the network.
  An attempt to start a voice call to a barred phone number will be stopped with a "+CME ERROR: call barred".
  An attempt to start a data or fax call to a barred phone number will be answered immediately with result code "NO CARRIER".
  The barred numbers are automatically removed from the blacklist according to the timing conditions specified in GSM02.07 Annex A.
- Emergency calls:
  If no SIM is inserted, call numbers 000, 08, 110, 112, 118,119, 911 and 999 cause an emergency call setup.
  If a SIM with ECC file is inserted, 112 and 911 and all additional call numbers stored in the ECC file cause an emergency call setup.
  If a SIM without ECC file is inserted, call numbers 112 and 911 and in addition all call numbers specified with AT^SCFG, "Call/ECC", parameter <ecc> will cause an emergency call setup.
- To start ATD via TC65i's DTR line AT^SCFG may be used, refer parameter <AutoExecATC>.
- When using the command on the second serial interface please see also Section 1.9.

Example

The following example shows the call setup procedure when a call is already active and a second call attempt fails because the line of the called party is busy:

atd03012345678	Dialing out the first party's number.
OK	The first call is established.
ATD03022222222	The number of the second party is dialed.
OK	The response "OK" is issued immediately though no call is established (same behavior as is you had chosen AT^SM20=0.)
BUSY	Line of the second called party is busy.

7.4 ATD><mem><n> Mobile originated call using specific memory and index number

Syntax

Exec Command

ATD><mem><n>[<mgsm>];

Response(s)

ERROR
+CME ERROR: <err>
If no dialtone (parameter ATX2 or ATX4):
NO DIALTONE
If busy (parameter setting ATX3 or ATX4):
BUSY
If connection cannot be set up:
NO CARRIER
NO DIALTONE
When TA returns to command mode after call release:
OK
If successfully connected:
OK

PIN	ASC0	ASC1	USB	MUX1	MUX2	MUX3	Charge	✈	Last
+	+	±	+	+	±	±	-	-	-

Reference(s)

V.250

Command Description

TA attempts to set up an outgoing call to the specified number. The termination character ";" is mandatory since dialing from a phonebook is only supported for voice calls and for sending *# codes of Supplementary Services or other functions.

Parameter Description

<mem>(str)

Phonebook storage:
For detailed description of storages see AT+CPBS.

“FD“	Fixed dialing phonebook
“SM“	SIM phonebook
“ON“	MSISDN list
“ME“	Mobile Equipment Phonebook
“LD“	Last number dialed phonebook
“MC“	Missed (unanswered received) calls list
“RC“	Received calls list
“VM“	CPHS voice mailbox phonebook

<n>(num)

Integer type memory location in the range of locations available in the selected memory, i.e. the index number returned by AT+CPBR.

<mgsm>(str)

String of GSM modifiers:
I Activates CLIR (disables presentation of own phone number to called party)
i Deactivates CLIR (enables presentation of own phone number to called party)

Notes

- This command may be aborted generally by receiving a character during execution. Abortion is not possible during some states of connection setup such as handshaking.
- There is no <mem> for emergency call ("EN").
- The command is not applicable to data calls. Any attempt to dial a data call number from <mem> causes the result code "NO CARRIER" to appear.
- Parameter <mgsm> only if no *# code is within the dialing string.
- See ATX for setting result code and call monitoring parameters.
- Any string after <mgsm> and before ';' are ignored.

Examples

EXAMPLE 1

To query the location number of the phonebook entry:

```
AT+CPBR=1,xx
```

TA returns the entries available in the active phonebook.

EXAMPLE 2

To dial a number from the SIM phonebook, for example the number stored to location 15:

```
ATD>"SM"15;
OK
```

EXAMPLE 3

To dial a phone number stored in the last dial memory on the SIM card:

```
ATD>"LD"9;
OK
```

7.5 ATD><n> Mobile originated call from active memory using index number

Syntax

Exec Command

ATD><n>[<mgsm>];

Response(s)

ERROR
+CME ERROR: <err>
If no dialtone (parameter ATX2 or ATX4):
NO DIALTONE
If busy (parameter setting ATX3 or ATX4):
BUSY
If connection cannot be set up:
NO CARRIER
NO DIALTONE
When TA returns to command mode after call release:
OK
If successfully connected:
OK

PIN	ASC0	ASC1	USB	MUX1	MUX2	MUX3	Charge	✈	Last
+	+	±	+	+	±	±	-	-	-

Reference(s)

V.250

Command Description

TA attempts to set up an outgoing call to the stored number. The termination character ";" is mandatory since dialing from a phonebook is only supported for voice calls and for sending *# codes of Supplementary Services or other functions.

Parameter Description

<n>(num)

Integer type memory location in the range of locations available in the selected memory, i.e. the index number returned by AT+CPBR.

<mgsm>(str)

String of GSM modifiers:
I Activates CLIR (disables presentation of own phone number to called party)
i Deactivates CLIR (enables presentation of own phone number to called party)

Notes

- This command may be aborted generally by receiving a character during execution. Abortion is not possible during some states of connection setup such as handshaking.
- The command is not applicable to data calls. Any attempt to dial a data call number from <n> causes the result code "NO CARRIER" to appear.
- Parameter <mgsm> only if no *# code is within the dialing string.

7.6 ATD><str> Mobile originated call from active memory using corresponding field

Syntax

Exec Command

ATD><str>[<mgsm>];

Response(s)

ERROR
+CME ERROR: <err>
If no dialtone (parameter ATX2 or ATX4):
NO DIALTONE
If busy (parameter setting ATX3 or ATX4):
BUSY
If connection cannot be set up:
NO CARRIER
NO DIALTONE
When TA returns to command mode after call release:
OK
If successfully connected:
OK

PIN	ASC0	ASC1	USB	MUX1	MUX2	MUX3	Charge	✈	Last
+	+	±	+	+	±	±	-	-	-

Reference(s)

V.250

Command Description

This command searches the active phonebook for a given string <str> and dials the assigned phone number. The termination character ";" is mandatory since dialing from a phonebook is only supported for voice calls and for sending *# codes of Supplementary Services or other functions.

Parameter Description

<str>(str)(+CSCS)

String type value ("x"), which should equal an alphanumeric field in at least one phonebook entry in the searched memories; used character set should be the one selected with AT+CSCS. <str> can contain escape sequences as described in chapter "Supported character sets".
<str> must be wrapped in quotation marks (""), if escape sequences or parameter <mgsm> are used or if the alphanumeric strings contains a blank. If not, quotation marks are optional.
If AT+CSCS is set to "UCS2", with respect to the coding of UCS2-characters only phonebook entries that contain an alphanumeric string with a size less than the half of the parameter <tlength> from AT+CPBW can be dialed.

<mgsm>(str)

String of GSM modifiers:
I Activates CLIR (disables presentation of own phone number to called party)
i Deactivates CLIR (enables presentation of own phone number to called party)

Notes

- This command may be aborted generally by receiving a character during execution. Abortion is not possible during some states of connection setup such as handshaking.
- The command is not applicable to data calls. Any attempt to dial <str> without semicolon ";" causes the result code "NO CARRIER" to appear.
- Parameter <mgsm> only if no *# code is within the dialing string.

7.7 ATDI Mobile originated call to ISDN number

Syntax

Exec Command

`ATDI<n>[;]`

Response(s)

If no dialtone (parameter ATX2 or ATX4):
`NO DIALTONE`
If busy (parameter setting ATX3 or ATX4):
`BUSY`
If connection cannot be set up:
`NO CARRIER`
`NO DIALTONE`
All other error reasons:
`+CME ERROR: <err>`
If successfully connected and non-voice call (TA switches to data state):
`CONNECT <text>`
When TA returns to command mode after call release:
`OK`
If successfully connected and voice call:
`OK`

PIN	ASC0	ASC1	USB	MUX1	MUX2	MUX3	Charge	✈	Last
+	+	-	+	+	-	-	-	-	-

Reference(s)

V.250

Command Description

TA attempts to set up an outgoing call to ISDN number. The termination character ";" is mandatory to set up voice calls or to send *# codes for Supplementary Services. It must not be used for data and fax calls.

Parameter Description

`<n>`(str)

ISDN number
String with maximum length of 20 characters. Allowed characters: +, 0-9, A, B, C.

Note

- This command may be aborted generally by receiving a character during execution. Abortion is not possible during some states of connection setup such as handshaking.

7.8 ATDL Redial last number used

Syntax

Exec Command

`ATDL[;]`

Response(s)

If there is no last number or number is not valid:
`+CME ERROR: <err>`
If no dialtone (parameter ATX2 or ATX4):
`NO DIALTONE`
If busy (parameter setting ATX3 or ATX4):
`BUSY`
If connection cannot be set up:
`NO CARRIER`
`NO DIALTONE`
If successfully connected and non-voice call (TA switches to online data mode):
`CONNECT <text>`
When TA returns to command mode after call release:
`OK`
If successfully connected and voice call:
`OK`

PIN	ASC0	ASC1	USB	MUX1	MUX2	MUX3	Charge	✈	Last
+	+	±	+	+	±	±	-	-	-

Reference(s)

V.250

Command Description

This command redials the last voice and data call number used in the ATD command. If terminated with semi-colon ";" ATDL dials the last voice call number stored in the "LD" phonebook. Otherwise, the last dialed data or fax number will be used (not contained in the "LD" phonebook).

Notes

- This command may be aborted generally by receiving a character during execution. Abortion is not possible during some states of connection setup such as handshaking.
- Parameter "I" and "i" only if no *#-code is within the dial string.

7.9 ATH Disconnect existing connection

Syntax

Exec Command
ATH[<n>]
Response(s)
OK

PIN	ASC0	ASC1	USB	MUX1	MUX2	MUX3	Charge	✈	Last
-	+	+	+	+	+	+	-	-	-

Reference(s)
V.250

Command Description

Disconnect existing call from command line by local TE and terminate call.

Parameter Description

<n>(num)	
[0]	disconnect from line and terminate call

Notes

- OK is issued after circuit 109 (DCD) is turned off, if it was previously on.
- ATH terminates every circuit switched call (voice, data or fax), even if it is issued via another interface. This behavior is in accordance with ITU-T V.250; (07/97, "Hook control": "ATH is terminating any call in progress.").
- ATH clears any active PDP context or terminates any existing PPP connection, but only if issued on the same interface where GPRS is used and if there is no pending network request for PDP context activation. It does not affect PDP contexts and PPP connections on other interfaces (see also Chapter "ATH Manual rejection of a network request for PDP context activation").

7.10 AT+CHUP Hang up call

Syntax

Test Command
AT+CHUP=?
Response(s)
OK ERROR +CME ERROR: <err>

Exec Command
AT+CHUP
Response(s)
OK ERROR +CME ERROR: <err>

PIN	ASC0	ASC1	USB	MUX1	MUX2	MUX3	Charge	✈	Last
+	+	+	+	+	+	+	-	-	-

Reference(s)
GSM 07.07

Command Description

Cancels all active and held calls.

Note

- AT+CHUP implements the same function as ATH except that it is not supported for Fax. Therefore, Fax connections can be disconnected with ATH only.

7.11 AT^SHUP Hang up call(s) indicating a specific GSM04.08 release cause

Syntax

Test Command
AT^SHUP=?
Response(s)
OK

Write Command
AT^SHUP=<cause>[, <cn>]
Response(s)
OK ERROR

PIN	ASC0	ASC1	USB	MUX1	MUX2	MUX3	Charge	✈	Last
+	+	+	+	+	+	+	-	-	-

Command Description

The write command serves to end one specific call or all calls known to the ME, indicating a specific GSM04.08 release cause specified by the user. The command can be used for voice, fax and data calls in any call status (i.e. any calls listed by AT+CLCC).

Parameter Description

<cause>(num)

release cause

Release cause from GSM04.08 to be indicated to the network.
The TC65i will release the selected connection(s) with release cause indication "cause" and location "user" (0) in the "disconnect" protocol message to the GSM Network. It depends on the network whether or not the release cause will be forwarded to the remote party.

1	Send GSM04.08 release cause "unassigned (unallocated) number"
16	Send GSM04.08 release cause "normal call clearing "
17	Send GSM04.08 release cause "user busy "
18	Send GSM04.08 release cause "no user responding "
27	Send GSM04.08 release cause "destination out of order "
31	Send GSM04.08 release cause "normal, unspecified"

<cn>(num)

call number

The "call number" is an optional index into the list of current calls available via AT+CLCC. AT command AT^SHUP will terminate the call identified by the specified call number. The default call number "0" is not assigned to any call, but signifies "all calls". As "0" is the default value, it may be omitted.
With AT^SHUP, Calls will be terminated regardless of their current call status, which may be any of the states allowed by AT+CLCC.

[0]	Terminate all known calls
1...7	Terminate the specific call number <cn>

Notes

- It depends on the network whether or not a delivered release cause will be forwarded to the remote party.
- With AT^SHUP, calls will be terminated regardless of their current call status, which may be any of the states allowed by AT+CLCC.

7.12 ATS0 Set number of rings before automatically answering a call

Syntax

Read Command
ATS0?
Response(s)
<n> OK ERROR

Write Command
ATS0=<n>
Response(s)
OK ERROR

PIN	ASC0	ASC1	USB	MUX1	MUX2	MUX3	Charge	✈	Last
±	+	+	+	+	+	+	-	-	-

Reference(s)
V.250

Parameter Description

<n>(num)(&W)(&V)	
000(&F)	Automatic answer mode is disabled.
001-255	Enable automatic answering after specified number of rings.

Notes

- This command works for MT data and fax calls.
- Autoanswering of CSD data and fax calls is supported on ASC0/Mux1 only.
- If <n> is set to higher values, the calling party may hang up before the call is automatically answered.
- The correlation between ATS7 and ATS0 is important.
  Example: Call setup may fail if ATS7=30 and ATS0=20.
- Setting is local to the interface. It is allowed to have different settings on different interfaces. In such cases the interface 'wins', which is idle and uses the smallest <n> value.
- The ATS0 write command is PIN protected.
- According to "3GPP TS 27.007 (GSM 07.07): AT command set for User Equipment (UE)", ATS0 is also used as GPRS compatibility command to answer automatically to a network request for PDP context activation (see Section 11.21). Therefore, when the ATS0 write command is issued with <n> greater than 0, the ME will attempt to perform a GPRS attach if not yet attached and if configured to do so (due to the setting AT^SCFG="GPRS/ATS0/withAttach","on").
  If the automatic GPRS attach fails the ME keeps trying to attach for approx. 5 minutes, before ATS0 ends up with "ERROR" or "+CME ERROR: unknown", though the new <n> value takes effect. To avoid the risk of long response times to ATS0 in such case take care that the parameter AT^SCFG=<gs0aa> is off, if autoanswer mode is not needed for GPRS or if the mobile works in non-GPRS networks.
  The GPRS attach will not be performed on recalling a stored user profile with ATZ or on powerup, even though a value <n> greater than 0 was stored in the user profile with AT&W.

7.13 ATS2 Set escape sequence character

The ATS2=43 is implemented for V.250ter compatibility reasons only, and has no effect.

Syntax

Read Command
ATS2?
Response(s)
<n> OK

Write Command
ATS2=<n>
Response(s)
OK ERROR

PIN	ASC0	ASC1	USB	MUX1	MUX2	MUX3	Charge	✈	Last
-	+	+	+	+	+	+	-	+	-

Reference(s)
V.250

Parameter Description

<n>(num)	
43	The data value

7.14 ATS6 Set pause before blind dialing

Syntax

Read Command

```
ATS6?
```

Response(s)

```
<n>
OK
```

Write Command

```
ATS6=<n>
```

Response(s)

```
OK
ERROR
```

PIN	ASC0	ASC1	USB	MUX1	MUX2	MUX3	Charge	✈	Last
-	+	-	+	+	-	-	-	+	-

Reference(s)

V.250

Command Description

No effect for GSM.

Parameter Description

`<n>`(num)(&W)(&V)

000(&F)...255

7.15 ATS7 Set number of seconds to wait for connection completion

ATS7 specifies the number of seconds the TA will wait for the completion of the call setup when answering or originating a data call. Also referred to as "no answer timeout". To put it plainly, this is the time to wait for the carrier signal. If no carrier signal is received within the specified time, the TA hangs up.

Syntax

Read Command

```
ATS7?
```

Response(s)

```
<n>
OK
```

Write Command

```
ATS7=<n>
```

Response(s)

```
OK
ERROR
```

PIN	ASC0	ASC1	USB	MUX1	MUX2	MUX3	Charge	✈	Last
-	+	-	+	+	-	-	-	+	-

Reference(s): V.250

Parameter Description

<n>(num)(&W)(&V)

Number of seconds to wait for connection completion

000...060(&F)

Notes

- Command ATS7 is only applicable to data calls.
- Values greater than 60 (maximum 255) cause no error, but <n> will be restored to the maximum value of 60.
- The correlation between ATS7 and ATS0 is important. If the called party has specified a high value for ATS0=<n> call setup may fail.
  Example: Call setup may fail if ATS7=30 and ATS0=20.

7.16 ATS8 Set number of seconds to wait for comma dialing modifier

This command specifies the amount of time, in seconds, that the DCE shall pause, during signalling of call addressing information to the network (dialling), when a "," (comma) dial modifier is encountered in a dial string.

Syntax

Read Command

```
ATS8?
```

Response(s)

```
<n>
OK
```

Write Command

```
ATS8=<n>
```

Response(s)

```
OK
ERROR
```

PIN	ASC0	ASC1	USB	MUX1	MUX2	MUX3	Charge	✈	Last
-	+	-	+	+	-	-	-	+	-

Reference(s): V.250

Command Description

No effect for GSM.

Parameter Description

<n>(num)(&W)(&V)	
0(&F)	DCE does not pause when "," encountered in dial string
1...255	Number of seconds to pause

7.17 ATS10 Set disconnect delay after indicating the absence of data carrier

Syntax

Read Command
ATS10?
Response(s)
<n> OK

Write Command
ATS10=<n>
Response(s)
OK ERROR

PIN	ASC0	ASC1	USB	MUX1	MUX2	MUX3	Charge	✈	Last
-	+	-	+	+	-	-	-	+	-

Reference(s)
V.250

Command Description

This parameter setting determines the amount of time, that the TA remains connected in absence of a data carrier. If the data carrier is detected before disconnect, the TA remains connected.

Parameter Description

<n>(num)(&W)(&V)

number of tenths of seconds of delay

001...2(&F)...254

7.18 ATO Switch from command mode to data mode / PPP online mode

Syntax

Exec Command

ATO[<n>]

Response(s)

If connection is not successfully resumed:
NO CARRIER
or
TA returns to data mode from command mode
CONNECT <text>
Note: <text> output only if ATX parameter setting with value > 0.

PIN	ASC0	ASC1	USB	MUX1	MUX2	MUX3	Charge	✈	Last
-	+	±	+	+	-	-	-	-	-

Reference(s)

V.250

Command Description

ATO is the corresponding command to the +++ escape sequence: When you have established a CSD call or a GPRS connection and TA is in command mode, ATO causes the TA to resume the data or GPRS connection and takes you back to data mode or PPP online mode.

Parameter Description

<n>(num)

[0]	Switch from command mode to data mode

7.19 +++ Switch from data mode or PPP online mode to command mode

Syntax

Exec Command
+++
Response(s)
OK

PIN	ASC0	ASC1	USB	MUX1	MUX2	MUX3	Charge	✈	Last
-	+	-	+	-	-	-	-	+	-

Reference(s)
V.250

Command Description

This command is only available during a CSD call or a GPRS connection. The +++ character sequence causes the TA to cancel the data flow over the AT interface and switch to command mode. This allows you to enter AT commands while maintaining the data connection to the remote device or, accordingly, the GPRS connection. To prevent the +++ escape sequence from being misinterpreted as data, it must be preceded and followed by a pause of at least 1000 ms. The +++ characters must be entered in quick succession, all within 1000 ms.

Note

- To return from command mode to data or PPP online mode: Enter ATO.

7.20 AT+CBST Select bearer service type

The AT+CBST write command selects the bearer service <name>, the data rate <speed> and the connection element <ce> to be used when data calls are originated. The settings also apply to mobile terminated data calls, especially when single numbering scheme calls or calls from analog devices are received (see AT+CSNS). See GSM 02.02[1] for a list of allowed combinations of subparameters.

Syntax

Test Command

```
AT+CBST=?
```

Response(s)

```
+CBST: (list of supported<speed>s), (list of supported<name>s), (list of supported<ce>s)
OK
```

Read Command

```
AT+CBST?
```

Response(s)

```
+CBST: <speed>, <name>, <ce>
OK
```

Write Command

```
AT+CBST=<speed>[, <name>[, <ce>]]
```

Response(s)

```
OK
ERROR
```

PIN	ASC0	ASC1	USB	MUX1	MUX2	MUX3	Charge	✈	Last
-	+	-	+	+	-	-	-	+	-

Reference(s)

GSM 07.07

Parameter Description

<speed>(num)(&W)(&V)

0	Autobauding
1	300 bps (V.21)
2	1200 bps (V.22)
4	2400 bps (V.22bis)
6	4800 bps (V.32)
[7](&F)	9600 bps (V.32)
14	14400 bps (V.34)
65	300 bps (V.110)
66	1200 bps (V.110)
68	2400 bps (V.110)
70	4800 bps (V.110)
71	9600 bps (V.110)
75	14400 bps (V.110)

<name>(num)(&W)

0(&F)	Asynchronous modem

<ce>(num)(&W)	
Transparent mode is not supported.	
1(&F)	Non-transparent

Note

- If problems are encountered with CSD connections at 14.4 kbit/s you may be required to change the Fixed Network User Rate depending on the network. See AT^SFNUR for details.

7.21 AT+CRLP Select radio link protocol parameters for originated non-transparent data calls

The AT+CRLP write command sets radio link protocol (RLP) parameters used when non-transparent data calls are originated. The read command returns the current settings for the supported RLP version 0.

Syntax

Test Command

AT+CRLP=?

Response(s)

+CRLP: (list of supported<iws>s), (list of supported<mws>s), (list of supported<T1>s), (list of supported<N2>s)
OK

Read Command

AT+CRLP?

Response(s)

+CRLP: <iws>, <mws>, <T1>, <N2>
OK

Write Command

AT+CRLP=[<iws>[, <mws>[, <T1>[, <N2>]]]]

Response(s)

OK
ERROR
+CME ERROR: <err>

PIN	ASC0	ASC1	USB	MUX1	MUX2	MUX3	Charge	✈	Last
-	+	-	+	+	-	-	-	+	-

Reference(s)

GSM 07.07

Parameter Description

<iws>(num)(&W)(&V)

Interworking window size (IWF to MS)

0...61(&F)

<mws>(num)(&W)(&V)

Mobile window size (MS to IWF)

0...61(&F)

<T1>(num)(&W)(&V)

Acknowledgement timer (T1 in 10 ms units)

39...[78](&F)...255

<N2>(num)(&W)(&V)

Re-transmission attempts N2

1...6(&F)...255

7.22 AT+CLCC List of current calls

The execute command lists all current calls. If the command is successful, but no calls are available, no information response is sent to TE.

Syntax

Test Command

```
AT+CLCC=?
```

Response(s)

```
OK
```

Exec Command

```
AT+CLCC
```

Response(s)

```
[+CLCC: <idx>, <dir>, <stat>, <mode>, <mpty>[, <number>, <type>[, <alpha>]]]
[+CLCC: <idx>, <dir>, <stat>, <mode>, <mpty>[, <number>, <type>[, <alpha>]]]
[+CLCC: ...]
OK
ERROR
+CME ERROR: <err>
```

PIN	ASC0	ASC1	USB	MUX1	MUX2	MUX3	Charge	✈	Last
+	+	+	+	+	+	+	-	-	-

Reference(s)

GSM 07.07

Parameter Description

<idx>(num)

Call identification number as described in GSM02.30 subclause 4.5.5.1; this number can be used in AT+CHLD command operations

<dir>(num)

0	Mobile originated call (MOC)
1	Mobile terminated call (MTC)

<stat>(num)

State of the call

0	Active
1	Held
2	Dialing (MOC)
3	Alerting (MOC)
4	Incoming (MTC)
5	Waiting (MTC)

<mode>(num)

Bearer/teleservice

0	Voice
1	Data
2	Fax

3	Voice followed by data, voice mode (only in connection with single numbering scheme AT+CSNS)
4	Alternating voice/data, voice mode (only in connection with single numbering scheme AT+CSNS)
5	Alternating voice/fax, voice mode (only in connection with single numbering scheme AT+CSNS)
6	Voice followed by data, data mode (only in connection with single numbering scheme AT+CSNS)
7	Alternating voice/data, data mode (only in connection with single numbering scheme AT+CSNS)
8	Alternating voice/fax, fax mode (only in connection with single numbering scheme AT+CSNS)
9	Unknown

<mpty>(num)

0	Call is not one of multiparty (conference) call parties
1	Call is one of multiparty (conference) call parties

<number>(str)

Phone number in format specified by <type>

<type>(num)

Type of address octect

145	Dialing string <number> includes international access code character '+'
128	number is restricted
129	Otherwise

<alpha>(str)(+CSCS)

Alphanumeric representation of <number> corresponding to the entry found in phonebook.
The maximum displayed length of <alpha> is 16 characters. If <alpha> has more than 16 characters, only the first 15 characters are displayed. To indicate an overflow, a special character will be used as the 16th character. This is a space if the character set selected with AT+CSCS is 'GSM', or 'E400' if the character set is 'UCS2'.
Due to time constraints on the necessary evaluation of the phonebook, this parameter may show a default value in early call phases (e.g. for <stat>= "dialing", "incoming" or "alerting"), even if a phonebook entry is present for the number concerned.

Note

- Teleservices other than voice, data, fax are not fully supported by ME. They are used only in connection with the handling for AT+CSNS, and may therefore occur in parameter <mode> for mobile terminated calls.

7.23 AT^SLCC Extended list of current calls

AT^SLCC covers essentially the same information as GSM 07.07 command AT+CLCC, with the following extensions:

- The execute command response contains the additional parameter <traffic channel assigned> which indicates whether the call has been assigned a traffic channel by the network and transmission of DTMF tones is possible.
- The additional write command allows to activate Event reporting for the list of current calls. If event reporting is active for an interface, a call status transition (cf. Call Status Information) and (if desired) the assignment of a traffic channel will generate an event report indication to this interface. In order to receive this event report as an URC, the URC presentation mode for this interface has to be configured with AT+CMER. Interface settings are saved with AT&W and can be displayed with AT&V
  The frequency of event report generation can be configured with AT command AT^SCFG. Refer to Call Status Information for further detail on the configuration options.
- The additional read command returns an indication whether event reporting is active for the current interface. Mind that the URC will be displayed only if the URC presentation mode for the interface concerned has been configured with AT+CMER.
- The exec command returns, like AT+CLCC, a list of current calls. If the command is successful, but no calls are available, no information response is sent to the TE.

Syntax

Test Command

```
AT^SLCC=?
```

Response(s)

```
^SLCC: (list of supported<n>s)
OK
```

Read Command

```
AT^SLCC?
```

Response(s)

```
^SLCC: <n>
OK
```

Exec Command

```
AT^SLCC
```

Response(s)

```
[^SLCC:<idx>, <dir>, <stat>, <mode>, <mpty>, <traffic channel assigned>[, <number>,
<type>[, <alpha>]]]
[^SLCC:<idx>, <dir>, <stat>, <mode>, <mpty>, <traffic channel assigned>[, <number>,
<type>[, <alpha>]]]
[^SLCC:...]
OK
ERROR
+CME ERROR: <err>
```

Write Command

```
AT^SLCC=[<n>]
```

Response(s)

```
OK
ERROR
+CME ERROR: <err>
```

PIN	ASC0	ASC1	USB	MUX1	MUX2	MUX3	Charge	✈	Last
+	+	+	+	+	+	+	-	-	-

Unsolicited Result Code

Unsolicited Call Status information

if the list of current calls is empty:
^SLCC:

if one or more calls are currently in the list:
^SLCC: <idx>, <dir>, <stat>, <mode>, <mpty>, <traffic channel assigned>[, <number>, <type>[, <alpha>]]
[^SLCC: <idx>, <dir>, <stat>, <mode>, <mpty>, <traffic channel assigned>[, <number>, <type>[, <alpha>]]]
[...]
^SLCC:

URC "^SLCC" displays the list of current calls as displayed with the execute command AT^SLCC. The list is displayed in the state it has at the time of display, not in the state it had when the signal was generated.
The URC's occurrence indicates call status changes for any of the calls in the list of current calls.
Please refer to Call Status Information and AT^SCFG for further information about the configuration of this URC.
Event reporting can be enabled separately for each interface. Interface settings are saved with AT&W and can be displayed with AT&V. Additionally, The URC presentation mode for the interface must be configured with AT+CMER.
Depending on the value of AT^SCFG setting <sucs>, Indicator "^SLCC" will be issued (if configured with write command AT^SLCC and AT+CMER)

- when a state transition ends in state "active" or in state "unknown" (if AT^SCFG setting <sucs>="restricted")
- when any state transition (including transitions beginning or ending in state "unknown") occurs in the list of active calls, or when a traffic channel is established (if AT^SCFG setting <sucs>="verbose").

If multiple displays of identical list configurations occur, this happens because of short intermediate states of the list, that have already been overridden by new transitions and states. Thus, it is guaranteed that the configuration displayed is always the current configuration at the time of the last display.
The list of active calls displayed with this URC will always be terminated with an empty line preceded by prefix "^SLCC: ", in order to indicate the end of the list.

Parameter Description

<n>(num)(&W)(&V)	
[0](&F)	Presentation of URC "^SLCC" disabled
1	Presentation of URC "^SLCC" enabled

<idx>(num)	
Call identification number as described in GSM02.30 subclause 4.5.5.1; this number can be used in AT+CHLD command operations.	

<dir>(num)	
0	Mobile originated call (MOC)
1	Mobile terminated call (MTC)

<stat>(num)	
state of the call	
0	Active
1	Held
2	Dialing (MOC)
3	Alerting (MOC)
4	Incoming (MTC)
5	Waiting (MTC)

<mode>(num)	
bearer/teleservice	
0	Voice
1	Data
2	Fax
3	Voice followed by data, voice mode (only in connection with single numbering scheme AT+CSNS)
4	Alternating voice/data, voice mode (only in connection with single numbering scheme AT+CSNS)
5	Alternating voice/fax, voice mode (only in connection with single numbering scheme AT+CSNS)
6	Voice followed by data, data mode (only in connection with single numbering scheme AT+CSNS)
7	Alternating voice/data, data mode (only in connection with single numbering scheme AT+CSNS)
8	Alternating voice/fax, fax mode (only in connection with single numbering scheme AT+CSNS)
9	Unknown

<mpty>(num)	
0	Call is not one of multiparty (conference) call parties
1	Call is one of multiparty (conference) call parties

<traffic channel assigned>(num)	
0	No traffic channel assigned. Transmission of DTMF tones not possible.
1	Traffic channel is assigned and the progress indicator IE has been received (call setup) or a voice connection has an active state. The parameter indicates that the audio path is activated. DTMF tones can be sent with AT+VTS.

<number>(str)

Phone number in format specified by <type>

<type>(num)	
Type of address octect	
145	Dialing string <number> includes international access code character '+'
128	number is restricted
129	Otherwise

<alpha>(str)(+CSCS)

Alphanumeric representation of <number> corresponding to the entry found in phonebook.
The maximum displayed length of <alpha> is 16 characters. If <alpha> has more than 16 characters, only the first 15 characters will be displayed. To indicate an overflow, a special character will be used as the 16th character. This will be a space if the character set selected with AT+CSCS is 'GSM', or 'E400' if the character set is 'UCS2'.
Due to time constraints on the necessary evaluation of the phonebook, this parameter may show a default value during early call phases (e.g. for <stat>= "dialing", "incoming" or "alerting"), even if a phonebook entry is present for the number concerned.

Notes

- Teleservices other than voice, data, fax are not fully supported by ME. They are used only in connection with the handling for AT+CSNS, and may therefore occur in parameter <mode> for mobile terminated calls.
- If a URC "^SLCC" in verbose mode (see AT^SCFG) has been buffered while the interface was in dedicated mode (depending on the settings of AT+CMER parameter <bfr>), each buffered event indicator will be output as a separate URC after the interface returns to idle mode.
  However, the output will deliver the list of current calls in the "current" state (at the time when the output is generated), possibly leading to multiple displays of identical list configurations.
- Some parameters of the AT+CHLD command, as well as some situations where the call status in the network changes very quickly (e.g. the transition between <stat>= "unknown", "dialing" and "alerting" for a call to a reachable subscriber within the registered network) may lead to quasi-simultaneous changes to the states of one or several calls in the list, possibly leading to multiple displays of identical list configurations.
- If multiple displays of identical list configurations occur, this happens because of intermediate states of the list, that have already been overridden by new transitions and states. Thus, it is guaranteed that the configuration displayed in such cases is the current configuration at the time of the last display.
- It is adviseable to receive URC "^SLCC" on an interface that is not used for call initiation, if verbose output is configured. If only voice calls are expected, a setting of AT^SM20= 0 may be used alternatively in order to keep the call from blocking the interface.
- If a multiparty call is established, the transmission of DTMF tones is not possible anymore till the call is released. This behaviour is caused due to an ambiguity between the different transaction identifiers.

Examples

EXAMPLE 1

^SYSSTART	
at+cpin=9999	
OK	
+CREG: 2	
+CREG: 1,"0145","0016"	We are now registered.
at^sm20=0	Command ATD for an outgoing voice call will terminate immediately with response "OK".
OK	
atd"1234567";	We start a voice call.
OK	"OK" response is issued immediately because of setting AT^SM20="0".
^SLCC: 1,0,2,0,0,0,"1234567",129,"Called Party"	MO voice call starts, paging B-party.
^SLCC:	End of current list
^SLCC: 1,0,2,0,0,1,"1234567",129,"Called Party"	Traffic channel established, network may now transmit network announcements, ME may now transmit DTMF tones.
^SLCC:	End of current list
^SLCC: 1,0,3,0,0,1,"1234567",129,"Called Party"	Call is now ringing at B-Party.
^SLCC:	End of current list
^SLCC: 1,0,0,0,0,1,"1234567",129,"Called Party"	B-Party has accepted the call, connection established.
^SLCC:	End of current list.
atd23456;	We start a second voice call.
OK	"OK" response is issued immediately because another call is already active (cf. ATD).
^SLCC: 1,0,1,0,0,0,"1234567",129,"Called Party"	The active call is automatically put on hold, triggering the display of the list.

^SLCC: 2,0,2,0,0,1,"23456",129	The second call has already started before the indication for the held call could be displayed
^SLCC:	End of current list.
^SLCC: 1,0,1,0,0,0,"1234567",129,"Called Party"	The identical list is displayed again, triggered by the start of the second voice call.
^SLCC: 2,0,2,0,0,1,"23456",129	The status of the second list entry has already been displayed with the previous URC.
^SLCC:	End of current list.
^SLCC: 1,0,1,0,0,0,"1234567",129,"Called Party"	The held call doesn't change status right now.
^SLCC: 2,0,3,0,0,1,"23456",129	The second call is now alerting the B-Party.
^SLCC:	End of current list.
^SLCC: 1,0,0,0,0,1,"1234567",129,"Called Party"	The held call doesn't change status right now.
^SLCC:	End of current list: the B-Party of the second call has not accepted the call in time, the second call has ended.
NO CARRIER	The second call has ended.
^SLCC:	list is now empty: B-Party has ended the first call.
NO CARRIER	The first call has ended.

EXAMPLE 2

^SLCC: 1,1,4,0,0,1,"1234567",129	Incoming voice call is signalled. Display is triggered by the incoming call, but the current status of the call at the time of display already comprises an active traffic channel.
^SLCC:	End of current list.
RING	Incoming call is signalled.
^SLCC: 1,1,4,0,0,1,"1234567",129	The incoming call had a traffic channel assigned from the start. This second identical display is triggered by the traffic channel assignment. Since the traffic channel was already indicated in the previous URC, both instances of the URC contain identical information.
^SLCC:	End of current list.
RING	Incoming call is signalled.
ata	Incoming call is accepted.
OK	call is established.
^SLCC: 1,1,0,0,0,1,"1234567",129	The call is now active.
^SLCC:	End of current list.
ath	Hang up the call.
OK	hang up complete.
^SLCC:	The list of current calls is empty again.

7.24 AT+CR Service reporting control

AT+CR configures the TA whether or not to transmit an intermediate result code +CR: <serv> to the TE when a call is being set up.
Setting the value of <mode> to 1 may lead to connection failure, if the application (e.g. WinFax) waits for default result code/URC.

Syntax

Test Command

```
AT+CR=?
```

Response(s)

```
+CR: (list of supported<mode>s)
OK
ERROR
```

Read Command

```
AT+CR?
```

Response(s)

```
+CR: <mode>
OK
ERROR
```

Write Command

```
AT+CR=<mode>
```

Response(s)

```
OK
ERROR
```

PIN	ASC0	ASC1	USB	MUX1	MUX2	MUX3	Charge	✈	Last
+	+	+	+	+	+	+	-	+	-

Reference(s)

GSM 07.07

Intermediate Result Code

If enabled, an intermediate result code is transmitted during connect negotiation when the TA has determined the speed and quality of service to be used, before any error control or data compression reports are transmitted, and before any final result code (e.g. CONNECT) appears.

```
+CR: <serv>
```

Parameter Description

<mode>(num)(&W)(&V)	
0(&F)	Disable
1	Enable

<serv>(str)	
“REL ASYNC“	Asynchronous non-transparent
“GPRS“	GPRS
“SYNC“	Fax connection

7.25 AT+CRC Set Cellular Result Codes for incoming call indication

The AT+CRC command controls whether or not to use the extended format of incoming call indication. <mode>=1 may lead to connection failure, if the application (e.g. WinFax) waits for the default URC.

Syntax

Test Command

AT+CRC=?

Response(s)

+CRC: (list of supported<mode>s)
OK
ERROR

Read Command

AT+CRC?

Response(s)

+CRC: <mode>
OK
ERROR

Write Command

AT+CRC=[<mode>]

Response(s)

OK
ERROR

PIN	ASC0	ASC1	USB	MUX1	MUX2	MUX3	Charge	✈	Last
-	+	+	+	+	+	+	-	+	-

Reference(s)

GSM 07.07

Unsolicited Result Codes

URC 1

RING

Indicates incoming call to the TE if <mode>=0.

URC 2

+CRING: <type>

Indicates incoming call to the TE if <mode>=1.

Parameter Description

<mode>(num)(&W)(&V)	
[0](&F)	Disable extended format
1	Enable extended format

<type>(str)	
“REL ASYNC“	Asynchronous non-transparent
“FAX“	Facsimile
“VOICE“	Voice
“GPRS“	<PDP_type>, <PDP_addr> [,[<L2P>][,<APN>]] GPRS network request for PDP context activation

7.26 AT+CSNS Single Numbering Scheme

The AT+CSNS command enables the ME to accept incoming calls when no bearer capability information is provided with the call, e.g. single numbering scheme calls or calls originating from analog devices.

Syntax

Test Command

```
AT+CSNS=?
```

Response(s)

```
+CSNS: (list of supported<mode>s)
OK
```

Read Command

```
AT+CSNS?
```

Response(s)

```
+CSNS: <mode>
OK
```

Write Command

```
AT+CSNS=[<mode>]
```

Response(s)

```
OK
ERROR
+CME ERROR: <err>
```

PIN	ASC0	ASC1	USB	MUX1	MUX2	MUX3	Charge	✈	Last
-	+	+	+	+	+	+	-	+	-

Reference(s)

GSM 07.07

Parameter Description

<mode>(num)

Parameter is non-volatile.

[0](D)	Voice: Each call received without bearer element is assumed to be speech
2	Fax: Each call received without bearer element is assumed to be an incoming fax.
4	Data: Each call received without bearer element is assumed to be a data call. Please take into account that the bearer service parameters set with AT+CBST apply to all data calls including those received without bearer capability.

Notes

- The command must be set before the call comes. By default, when you do not modify the settings, all calls received without bearer element are assumed to be voice.
- If problems are encountered with CSD connections at 14.4 kbit/s you may be required to change the Fixed Network User Rate depending on the network. See AT^SFNUR for details.

7.27 AT^SCNI List Call Number Information

Syntax

Test Command

```
AT^SCNI=?
```

Response(s)

```
OK
```

Exec Command

```
AT^SCNI
```

Response(s)

```
^SCNI: <id>1[,<cs>[,<number>,<type>]]
^SCNI: <id>2[,<cs>[,<number>,<type>]]
[...]
OK
ERROR
+CME ERROR: <err>
```

PIN	ASC0	ASC1	USB	MUX1	MUX2	MUX3	Charge	✈	Last
+	+	+	+	+	+	+	-	-	-

Command Description

TA returns a list of current calls of ME.

Parameter Description

<id>(num)

call identification number as described in GSM 02.30[19] subclause 4.5.5.1; this number can be used in AT+CHLD command operations

1...7

<cs>(num)

Call status of respective call number (first parameter)

0	call hold
1	call in progress
2	waiting call

<number>(str)

string type phone number in format specified by <type>

<type>(num)

type of address octet in integer format; 145 when dialling string includes international access code character "+", 128 when number is restricted otherwise 129

Note

- See also GSM 07.07: AT+CLCC

7.28 AT^SLCD Display Last Call Duration

Syntax

Test Command

```
AT^SLCD=?
```

Response(s)

```
OK
ERROR
+CME ERROR: <err>
```

Exec Command

```
AT^SLCD
```

Response(s)

```
^SLCD: <time>
OK
ERROR
+CME ERROR: <err>
```

PIN	ASC0	ASC1	USB	MUX1	MUX2	MUX3	Charge	✈	Last
+	+	+	+	+	+	+	-	+	-

Command Description

TA returns last call duration or current call duration.

Parameter Description

<time>(str)

Format is "hh:mm:ss", where characters indicate hours, minutes, seconds; E.g. 22:10:00 "22:10:00"
Max value is 9999:59:59

Note

- The proper working of that command is network dependant.

7.29 AT^STCD Display Total Call Duration

Syntax

Test Command

```
AT^STCD=?
```

Response(s)

```
OK
ERROR
+CME ERROR: <err>
```

Exec Command

```
AT^STCD
```

Response(s)

```
^STCD: <time>
OK
ERROR
+CME ERROR: <err>
```

PIN	ASC0	ASC1	USB	MUX1	MUX2	MUX3	Charge	✈	Last
+	+	+	+	+	+	+	-	+	-

Command Description

TA returns total call duration (accumulated duration of all calls).

Parameter Description

`<time>`(str)

Format is "hh:mm:ss", where characters indicate hours, minutes, seconds; E.g. 22:10:00 "22:10:00"
Max value is 9999:59:59

Notes

- The Total Call Duration will not be reset by power off or other means.
- The proper working of that command is network dependant and only for MO calls.

7.30 ATP Select pulse dialing

Syntax

Exec Command
ATP
Response(s)
OK

PIN	ASC0	ASC1	USB	MUX1	MUX2	MUX3	Charge	✈	Last
-	+	-	+	+	-	-	-	-	-

Reference(s)
V.250

Note

- No effect for GSM.

7.31 ATT Select tone dialing

Syntax

Exec Command
ATT
Response(s)
OK

PIN	ASC0	ASC1	USB	MUX1	MUX2	MUX3	Charge	✈	Last
-	+	-	+	+	-	-	-	-	-

Reference(s)
V.250

Note

- No effect for GSM.

8. Network Service Commands

The AT Commands described in this chapter are related to various network services. More commands related to this area can be found in Chapter 9., Supplementary Service Commands.

8.1 AT+COPN Read operator names

The AT+COPN command returns the list of operator names from the ME. Each operator code <numericn> that has an alphanumeric equivalent <alphan> in the ME memory is returned. See also: AT^SPLM.

Syntax

Test Command

```
AT+COPN=?
```

Response(s)

```
OK
ERROR
+CME ERROR: <err>
```

Exec Command

```
AT+COPN
```

Response(s)

```
+COPN: <numericn>,<alphan>
+COPN: ...
OK
ERROR
+CME ERROR: <err>
```

PIN	ASC0	ASC1	USB	MUX1	MUX2	MUX3	Charge	✈	Last
+	+	+	+	+	+	+	-	+	-

Reference(s)

GSM 07.07

Parameter Description

<numericn>(str)

Operator in numeric format; GSM location area identification number.

<alphan>(str)

Operator in long alphanumeric format; can contain up to 26 characters.

8.2 AT+COPS Operator Selection

AT+COPS queries the present status of the TC65i's network registration and allows to determine whether automatic or manual network selection shall be used. Additional service is available with AT^SOPS.

Three operator selection modes are available:

- Automatic
  TC65i searches for the home operator automatically. If successful the TC65i registers to the home network. If the home network is not found, TC65i goes on searching. If a permitted operator is found, TC65i registers to this operator.
  If no operator is found the TC65i remains unregistered.
- Manual
  Desired operator can be determined using the AT+COPS write command. If the operator is found, TC65i registers to it immediately. If the selected operator is forbidden, the TC65i remains unregistered.
- Manual/automatic
  The ME first tries to find the operator determined via AT+COPS write command. If the ME is able to register to this operator, it enters the manual operator selection mode. If the ME cannot find this operator or fails to register to this operator, then it enters the automatic operator selection mode and starts to select the home operators network or another (permitted) one. If the ME is registered and the manually selected network is not available, the ME will remain registered without further result code notification.

The most recently entered operator selection mode is still valid after the ME was restarted (power-off/on).

The AT+COPS test command conists of several parameter sets, each representing an operator present in the network.
Each set contains the following information:

- an integer indicating the availability of the operator,
- long alphanumeric format of the operator's name and
- numeric format representation of the operator.

Any of the parameters may be unavailable and will then be an empty field (,,). The list of operators comes in the following order: Home network, networks referenced in SIM and other networks.
The operator list is followed by a list of the supported <mode>s and <format>s. These lists are delimited from the operator list by two commas.
If the test command is used during an ongoing GPRS transfer, traffic will be interrupted for up to one minute.

The AT+COPS read command returns the current <mode> and the currently selected operator. If no operator is selected, <format> and <oper> are omitted.

The AT+COPS write command forces an attempt to select and register to the GSM network operator (see note below). If the selected operator is not available, no other operator will be selected (except <mode>=4). The selected operator name <format> will apply to further read commands, too.

Command settings are effective over all serial interfaces of the TC65i.

Syntax

Test Command

```
AT+COPS=?
```

Response(s)

```
+COPS: [list of present operators (<opStatus>, long alphanumeric <oper>s,,numeric <oper>s ], , (list of supported <mode>s), (list of supported <format>s)
OK
ERROR
+CME ERROR: <err>
```

Read Command

AT+COPS?

Response(s)

+COPS:<mode>[, <format>[, <oper>]]
OK
ERROR
+CME ERROR: <err>

Write Command

AT+COPS=<mode>[, <format>[, <oper>]]

Response(s)

OK
ERROR
+CME ERROR: <err>

PIN	ASC0	ASC1	USB	MUX1	MUX2	MUX3	Charge	✈	Last
±	+	+	+	+	+	+	-	-	-

Reference(s)

GSM 07.07

Parameter Description

<opStatus>(num)

Status

0	Unknown
1	Operator available
2	Current operator
3	Operator forbidden

<oper>(str)

Operator

If test command: Operator name in long alphanumeric format and numeric format.
If read command: Operator name as per <format>.
If write command: Operator name in numeric format.

<mode>(num)(&V)

Parameter values 0 and 1 are stored non-volatile in the TC65i.

0(D)	Automatic mode; <oper> field is ignored.
1	Manual operator selection Write command requires <oper> in numeric format, i.e. <format> shall be 2. Read command returns the current <mode> and the currently selected <oper>. If no operator is selected, <format> and <oper> are omitted.
2	Manually deregister from network and remain unregistered until <mode>=0 or 1 or 4 is selected.
3	Set only <format> (for AT+COPS read command).
4	Automatic / manual selection; if manual selection fails, automatic mode (<mode>=0) is entered (<oper> field will be present).

<format>(num)(&W)(&V)	
0(&F)	Long alphanumeric format of <oper>. Can be up to 26 characters long.
2	Numeric format of <oper>. This is the GSM Location Area Identification (LAI) number, which consists of the 3-digit Mobile Country Code (MCC) plus the 2- or 3-digit Mobile Network Code (MNC).

Notes

- It is not recommended to use the AT+COPS command before passing the CHV (card holder verification) / SIM PIN1 verification. In case of entering of AT+COPS= 0 before PIN1 verification the module will answer with OK and does not try to register to the network. Also, the test command should only be used after PIN1 authentication.
- It's possible to apply a 5- or 6-digit LAI for numeric format of <oper> parameter. Please use the correct 2- or 3-digit Mobile Network Code. Otherwise an unintended PLMN could be selected.
- It is not recommended to use the AT+COPS write and test command while TC65i is searching for a new operator. In this case the module will answer with ERROR. Please use AT+CREG to verify the network registration status.

8.3 AT^SOPS Extended Operator Selection

AT^SOPS queries the present status of the TC65i's network registration. Since basic operator selection services are available with AT+COPS this command uses the methods of the Enhanced Operator Name String (EONS) specification while handling operator name strings. Additional EONS related information is available with AT^SIND.

AT^SOPS test command lists sets of five parameters, each representing an operator present in the network. A set consists of

1. an integer indicating the availability of the operator,
2. specification of the source of the operator name <eonsOperator>,
3. operator name according to EONS Table,
4. Service Provider Name from the SIM Service Table and
5. numeric format representation of the operator.

Any of the parameters may be unavailable and will then be an empty field (,,).
The list of operators comes in the following order: Home network, networks referenced in SIM and other networks.
After the operator list the TC65i returns lists of supported <mode>s and <format>s. These lists are delimited from the operator list by two commas.
If the test command is used while an ongoing GPRS transfer, traffic will be interrupted for up to one minute.

Command settings are effective over all serial interfaces of the TC65i.

Syntax

Test Command

```
AT^SOPS=?
```

Response(s)

```
^SOPS:[list of present operator( <opStatus>, <eonsType>, <eonsOperator>, <servProvider>,
<opName>)s ], , (list of supported <mode>)s, (list of supported <format>)s
OK
ERROR
+CME ERROR: <err>
```

PIN	ASC0	ASC1	USB	MUX1	MUX2	MUX3	Charge	✈	Last
+	+	+	+	+	+	+	-	-	-

Parameter Description

<opStatus>(num)

Status	
0	unknown
1	operator available
2	current operator
3	operator forbidden

<eonsType>(num)

Specification of the source of the operator name <eonsOperator>. Details of EONS-supplied operator name types are available at AT^SIND.

<eonsOperator>

Operator name; format depends on the source of the operator name, specified by <eonsType>.

`<servProvider>`(str)

Service Provider Name according to setting of Service No. 17 in the SIM Service Table (EF_{SST}).

`<opName>`

Operator

Operator name in numerical presentation contains the GSM Location Area Identification (LAI) number, which consists of the 3-digit Mobile Country Code (MCC) plus the 2- or 3-digit Mobile Network Code (MNC). Parameter is stored non-volatile to the SIM.

`<mode>`(num)

Parameter is not applicable.

`<format>`(num)

Parameter is not applicable.

Notes

- The `AT^SOPS` Test command is only accepted by the module after a valid pin has been entered.
- It is not recommended to use the `AT^SOPS` test command while TC65i is searching for a new operator. In this case the module will answer with ERROR. Please use `AT+CREG` to verify the network registration status.

8.4 AT+CREG Network registration

The AT+CREG command serves to verify the network registration status of the ME. For this purpose two types of URCs are available.
The AT+CREG read command returns the URC presentation mode <n> and an integer <stat> that shows the registration status of the ME. The location information elements <lac> and <ci> are returned only when <n>=2 and ME is registered to the network.

Syntax

Test Command

```
AT+CREG=?
```

Response(s)

```
+CREG: (list of supported<n>s)
OK
```

Read Command

```
AT+CREG?
```

Response(s)

```
+CREG: <n>, <stat>[, <lac>, <ci>]
OK
ERROR
+CME ERROR: <err>
```

Write Command

```
AT+CREG=[<n>]
```

Response(s)

```
OK
ERROR
+CME ERROR: <err>
```

PIN	ASC0	ASC1	USB	MUX1	MUX2	MUX3	Charge	✈	Last
-	+	+	+	+	+	+	-	-	-

Reference(s)

GSM 07.07

Unsolicited Result Codes

URC 1

If <n>=1 and there is a change in the ME network registration status:

```
+CREG: <stat>
```

URC 2

If <n>=2 and there is a change in the ME network registration status or a change of the network cell:

```
+CREG: <stat>[, <lac>, <ci>]
```

Parameter Description

<n>(num)(&W)(&V)	
[0](&F)	Disable +CREG URC
1	Enable URC +CREG:<stat> to report status of network registration
2	Enable URC +CREG:<stat>[,<lac>,<ci>] to report status of network registration including location information. The optional parameters <lac> and <ci> will not be updated during calls.

<stat>(num)(&V)	
0	Not registered, ME is currently not searching for new operator Normally, status 0 occurs temporarily between two network search phases (status 2). However, if it persists, one the following reasons may apply: • Automatic network selection is active, but probably there is - no SIM card available - no PIN entered - no valid Home PLMN entry found on the SIM • Manual network selection is active and the selected network is available, but login fails due to one of the following reasons: - #11 ... PLMN not allowed - #12 ... Location area not allowed - #13 ... Roaming not allowed in this location area In either case, user intervention is required. Yet, emergency calls can be made if any network is available.
1	Registered to home network
2	Not registered, but ME is currently searching for a new operator The ME searches for an available network. Failure to log in until after more than a minute may be due to one of the following reasons: • No network available or insufficient Rx level. • The ME has no access rights to the networks available. • Networks from the SIM list of allowed networks are around, but login fails due to one of the following reasons: - #11 ... PLMN not allowed - #12 ... Location area not allowed - #13 ... Roaming not allowed in this location area After this, the search will be resumed (if automatic network search is enabled). • The Home PLMN or an allowed PLMN is available, but login is rejected by the cell (reasons: Access Class or LAC). If at least one network is available, emergency calls can be made.
3	Registration denied • Authentication or registration fails after Location Update Reject due to one of the following reasons: - #2 ... IMSI unknown at HLR - #3 ... Illegal MS - #6 ... Illegal ME Either the SIM or the MS or the ME are unable to log into any network. No further attempt is made to search or log into a network. User intervention is required. Emergency calls can be made, if any network is available.
4	Unknown (not used)
5	Registered, roaming The ME is registered at a foreign network (national or international network)

<lac>(str)

Two byte location area code in hexadecimal format (e.g. "00C3" equals 193 in decimal).

<ci>(str)

Two byte cell ID in hexadecimal format.

Note

- After the "+CREG: 1" (or "+CREG: 5") URC and before the "^SSIM READY" URC it is not sure that outgoing and incoming calls can be made and short message functions executed. Emergency calls are possible. Outgoing and incoming calls are always possible AFTER having received the "+CREG: 1" (or "+CREG: 5") and "^SSIM READY" URCs.
  See also Section 23.1, Restricted access to SIM data after SIM PIN authentication.

Example

AT+CREG=2	Activates extended URC mode.
OK	
AT+COPS=0	Forces ME to automatically search network operator.
OK	
+CREG: 2	URC reports that ME is currently searching.
+CREG: 1,"0145","291A"	URC reports that operator has been found.

8.5 AT+CSQ Signal quality

The AT+CSQ execute command indicates the received signal strength <rssi> and the channel bit error rate <ber>.

Syntax

Test Command

AT+CSQ=?

Response(s)

+CSQ: (list of supported<rssi>s), (list of supported<ber>s)
OK

Exec Command

AT+CSQ

Response(s)

+CSQ: <rssi>,<ber>
OK

PIN	ASC0	ASC1	USB	MUX1	MUX2	MUX3	Charge	✈	Last
-	+	+	+	+	+	+	-	-	-

Reference(s)

GSM 07.07

Parameter Description

<rssi>(num)	
0	-113 dBm or less
1	-111 dBm
2..30	-109... -53 dBm
31	-51 dBm or greater
99	not known or not detectable

<ber>(num)	
0..7	as RXQUAL values in the table in GSM 05.08 section 8.2.4.
99	not known or not detectable

Note

- After using network related commands such as AT+CCWA, AT+CCFC, AT+CLCK, users are advised to wait 3s before entering AT+CSQ. This is recommended to be sure that any network access required for the preceding command has finished.

8.6 AT^SMONC Cell Monitoring

The AT^SMONC execute command delivers cell information containing 9 values from a maximum of 7 base stations. The first base station is the serving cell.

Syntax

Test Command
AT^SMONC=?
Response(s)
OK ERROR +CME ERROR: <err>

Exec Command
AT^SMONC
Response(s)
^SMONC:<MCC>$_1$, <MNC>$_1$, <LAC>$_1$, <cell>$_1$, <BSIC>$_1$, <chann>$_1$, <RSSI>$_1$, <C1>$_1$, <C2>$_1$, <MCC>$_2$, <MNC>$_2$, <LAC>$_2$, <cell>$_2$, <BSIC>$_2$, <chann>$_2$, <RSSI>$_2$, <C1>$_2$, <C2>$_2$, ... OK ERROR +CME ERROR: <err>

PIN	ASC0	ASC1	USB	MUX1	MUX2	MUX3	Charge	✈	Last
+	+	+	+	+	+	+	-	-	-

Reference(s)
3GPP TS 05.08

Parameter Description

<MCC>(num)

Mobile country code

3 digits, e.g. 232

000	Not decoded

<MNC>(num)

Mobile network code

2 digits or 3 digits, e.g. 07 or 003

000	Not decoded

<LAC>(num)

Location area code

4 hexadecimal digits, e.g. 4EED

0000	Not decoded

<cell>(num)

Cell identifier

4 hexadecimal digits, e.g. 4EAF

0000	Not decoded
FFFF	Cell ID currently not available, e.g. because the cell ID information is not yet read from the Sysinfo 3 transmitted by the base station.

<BSIC>(num)

Base station identity code

2 digits, e.g. 32

00	Not decoded

<chann>(num)

ARFCN (Absolute Frequency Channel Number)

0	Not decoded. In this case, all remaining parameters related to the same channel are neither decoded. For example, a non-existing cell appears as follows: 000,000,0000,0000,00,0,0,-,-

<RSSI>(num)

Received signal level of the BCCH carrier (0..63). The indicated value is composed of the measured value in dBm plus an offset. This is in accordance with a formula specified in 3GPP TS 05.08

<C1>(num)

Coefficient for base station reselection, e.g. 30. In dedicated mode, under certain conditions the parameter cannot be updated. In such cases a '-' is presented.

<C2>(num)

Coefficient for base station reselection, e.g. 30. In dedicated mode, under certain conditions the parameter cannot be updated. In such cases a '-' is presented.

Note

- To some extent, the cell monitoring commands AT^MONI, AT^MONP and AT^SMONC cover the same parameters. The receiving level, for example, can be queried with all three commands. Yet the resulting values may be slightly different, even though obtained over a time period of a few seconds. This is quite normal and nothing to worry about, as the cell information is permanently updated.

8.7 AT^SMOND Cell Monitoring

The AT^SMOND execute command can be used to obtain status information of the service cell and up to six neighbour cells. The advantage over other cell monitoring commands is that AT^SMOND delivers more detailed information about the received signal strength.

Syntax

Test Command

```
AT^SMOND=?
```

Response(s)

```
OK
ERROR
+CME ERROR: <err>
```

Exec Command

```
AT^SMOND
```

Response(s)

```
^SMOND:[<sci>][, <nci>][, <TA>][, <rssiber>]
OK
ERROR
+CME ERROR: <err>
```

PIN	ASC0	ASC1	USB	MUX1	MUX2	MUX3	Charge	✈	Last
+	+	+	+	+	+	+	-	-	-

Reference(s)

3GPP TS 05.08

Parameter Description

<sci>(str)

Serving cell information (comma-separated, no cr/lf included)

<MCC>,<MNC>,<LAC>,<cell>,<BSIC>,<chann>,<RxLev>,<RxLev>Full,<RxLev>Sub,<RxQual>,<RxQual>Full,<RxQual>Sub,<Timeslot>
If no serving cell is found, unavailable values are omitted:" ,,,,,,<RxLev>,,,0,,,0"

<nci>(str)

Neighbour cell information for neighbour cell 1 through 6 (comma-separated, no cr/lf included)

$<MCC>_1$,$<MNC>_1$,$<LAC>_1$,$<cell>_1$,$<BSIC>_1$,$<chann>_1$,$<RxLev>_1$, (these parameters repeated for neighbour cells 2 through 6 with no CR/LF): ... $<MCC>_6$,$<MNC>_6$,$<LAC>_6$,$<cell>_6$,$<BSIC>_6$,$<chann>_6$,$<RxLev>_6$
An unavailable cell appears as follows: " ,,,,,,0"

<rssiber>(str)

Values for RSSI and BER (comma-separated, no cr/lf included)

<RSSI>,<BER>

<MCC>(num)

Mobile country code

3 digits, e.g. 232

000	Not decoded

<MNC>(num)

Mobile network code

2 digits or 3 digits, e.g. 07 or 003

000	Not decoded

<LAC>(num)

Location area code

4 hexadecimal digits, e.g. 4EED

0000	Not decoded

<cell>(num)

Cell identifier

4 hexadecimal digits, e.g. 4EAF

0000	Not decoded
FFFF	Cell ID currently not available, e.g. because the cell ID information is not yet read from the Sysinfo 3 transmitted by the base station.

<BSIC>(num)

Base station identity code

2 digits, e.g. 32

00	Not decoded

<chann>(num)

ARFCN (Absolute Frequency Channel Number)

<RxLev>(num)

Received signal level in dBm

<RxQual>(num)

Received signal quality as defined in GSM05.08

<Timeslot>(num)

Assigned timeslot. If mobile is in idle mode, timeslot 0 (BCCH timeslot) will be indicated.

0...8	Assigned timeslot

<TA>(num)

Timing advance for the serving cell, in bits.

<RSSI>(num)

Receive Level, with value 99 indicating "not known or not detectable"

0...31	Signifies the RSSI range from -113dBm or less ("0") to -51dBm or greater ("31") in steps of -2dBm (e.g. "1" = -111 dBm, "2" = -109 dBm ..., "30" = -53dBm)

<BER>(num)	
Bit Error rate, with value 99 indicating "not known or not detectable"	
0...7	as RXQUAL values RXQUAL0 to RXQUAL7 in GSM 05.08 section 8.2.4

Notes

- To some extent, the cell monitoring commands AT^SMOND, AT^MONI, AT^MONP and AT^SMONC cover the same parameters. The receiving level, for example, can be queried with all three commands. Yet the resulting values may be slightly different, even though obtained over a time period of a few seconds. This is quite normal and nothing to worry about, as the cell information is permanently updated.
- During a connection, not all of the neighbour cell information can be decoded. The following restrictions apply:
  - Information is updated only for neighbour cells that have already been visible at connection setup, and continue to be included in the list of cells.
  - New neighbour cells added to the list, for example after handover, cannot be displayed until the connection is released.

Example

at^smond	Execute command
^SMOND:262,01,3008,6060,32,100,66,,,0,,,0, 262,01,3008,DDD1,35,92,80, 262,01,3008,,31,96,83, 262,01,3008,BFBE,35,27,86, 262,01,3008,,32,98,88, 262,01,3008,BB44,32,90,89, 262,01,3008,8307,31,22,93, 2,23,99	Line breaks inserted for readability in print

8.8 AT^SFNUR Select the fixed network user rate

The AT^SFNUR command specifies the Fixed Network User Rate (FNUR) parameter. This parameter is important only for mobile originated 14.4 kbit/s UDI calls (AT+CBST=75) and mobile terminated data calls if the bearer capability information element is delivered without data bearer service (see AT+CSNS and AT+CBST commands).

Changes are recommended only if a CSD call fails. The choice as to which of the values to use depends on the GSM network and the location. Users should be aware that even the same operator may apply varying FNUR configurations in different regions.

The AT^SFNUR command has no effect on CSD connections controlled by the Internet Service commands. If needed for the Internet Services the Fixed Network User Rate can be set in the connection profile. For details see AT^SICS, parameter <conParmValue> "fnur".

Syntax

Test Command

```
AT^SFNUR=?
```

Response(s)

```
^SFNUR:(list of supported <value>s)
OK
```

Read Command

```
AT^SFNUR?
```

Response(s)

```
^SFNUR: <value>
OK
ERROR
+CME ERROR: <err>
```

Write Command

```
AT^SFNUR=<value>
```

Response(s)

```
OK
ERROR
+CME ERROR: <err>
```

PIN	ASC0	ASC1	USB	MUX1	MUX2	MUX3	Charge	✈	Last
-	+	+	+	+	+	+	-	+	-

Parameter Description

<value>(num)	
0	not applicable
1	9.6 kbit/s
2(P)	14.4 kbit/s
3	19.2 kbit/s
4	28.8 kbit/s
5	38.4 kbit/s
6	48.0 kbit/s
7	56.7 kbit/s
8	64.0 kbit/s

8.9 AT^MONI Monitor idle mode and dedicated mode

The AT^MONI command supplies information of the serving/dedicated cell. There are two ways to retrieve the information: once on request by using the execute command or automatically every <period> seconds by using the write command. To stop the periodic presentation type "AT" or "at".

Syntax

Test Command

AT^MONI=?

Response(s)

^MONI: (list of supported <period>s)
OK

Exec Command

AT^MONI

Response(s)

See: Section 8.9.1, AT^MONI responses
OK

Write Command

AT^MONI=<period>

Response(s)

See: Section 8.9.1, AT^MONI responses
OK
ERROR
+CME ERROR: <err>

PIN	ASC0	ASC1	USB	MUX1	MUX2	MUX3	Charge	✈	Last
-	+	+	+	+	+	+	-	-	-

Parameter Description

<period>(num)

Display period in seconds

1...254

Notes

- The two header lines (see Section 8.9.1, AT^MONI responses) are output after every ten data lines.
- The length of following output lines exceeds 80 characters. Therefore a terminal program may draw a carriage return on a screen. However, this is not part of the response.
- If the ME is Java controlled, periodic retrieval of cell information using the write command AT^MONI=<period> is not supported. If periodic cell information is required simply repeat the execute commands at regular intervals.
- The parameters LAC and cell are presented as hexadecimal digits, the remaining parameters are composed of decimal digits.
- If the radio cell changes during a connection, the parameters PWR, RXLev and C1 of the 'Serving Cell' part cannot be updated under certain conditions.
- If the BS supports frequency hopping during a connection, the dedicated channel (parameter chann) is not stable. This mode is indicated by chann = 'h'.

- To some extent, the cell monitoring command AT^SMONC covers the same parameters. The receiving level, for example, can be queried with both commands. Yet the resulting values may be slightly different, even though obtained over a time period of a few seconds. This is quite normal and nothing to worry about, as the cell information is permanently updated.
- For compatibility with earlier products and to support legacy applications, any input character may be used to stop the output in certain cases (depending on the settings of AT+IPR and AT+CMUX).

8.9.1 AT^MONI responses

ME is not connected:
a) ME is camping on a cell and registered to the network:

```
Serving Cell                                              I Dedicated channel
chann rs  dBm  MCC MNC  LAC cell NCC BCC PWR RXLev  C1 I chann TS timAdv PWR  dBm Q ChMod
1013  21  -71  001  01 1001 0103   7   7  33  -105  33 I    No connection
```

b) ME is camping on a cell but not registered to the network (only emergency call allowed):

```
Serving Cell                                              I Dedicated channel
chann rs  dBm  MCC MNC  LAC cell NCC BCC PWR RXLev  C1 I chann TS timAdv PWR  dBm Q ChMod
1013  21  -71  001  01 1001 0103   7   7  33  -105  33 I    Limited Service
```

c) ME camping on a cell, but searching for a better cell (cell reselection):

```
Serving Cell                                              I Dedicated channel
chann rs  dBm  MCC MNC  LAC cell NCC BCC PWR RXLev  C1 I chann TS timAdv PWR  dBm Q ChMod
1013  21  -71  001  01 1001 0103   7   7  33  -105  33 I    Cell Reselection
```

d) ME is searching and could not (yet) find a suitable cell:

```
Serving Cell                                              I Dedicated channel
chann rs  dBm  MCC MNC  LAC cell NCC BCC PWR RXLev  C1 I chann TS timAdv PWR  dBm Q ChMod
Searching
```

ME is connected (Call in progress):

```
Serving Cell                                              I Dedicated channel
chann rs  dBm  MCC MNC  LAC cell NCC BCC PWR RXLev  C1 I chann TS timAdv PWR  dBm Q ChMod
1013  19  -76  001  01 1001 0103   7   7  33  -105  33 I 1015   1      0   5  -76 0 S_HR
```

Columns for Serving Cell:

Column	Description
chann	ARFCN (Absolute Frequency Channel Number) of the BCCH carrier
rs	RSSI value 0 - 63 (RSSI = Received signal strength indication)
dBm	Receiving level of the BCCH carrier in dBm
MCC	Mobile Country Code (first part of the PLMN code)
MNC	Mobile Network Code (second part of the PLMN code)
LAC	Location area code, see note
cell	Cell ID
NCC	PLMN colour code
BCC	Base station colour code
PWR	Maximal power level used on RACH channel in dBm

Column	Description
RXLev	Minimal receiving level (in dBm) to allow registration
C1	Coefficient for base station selection

Columns for Dedicated channel:

Column	Description
chann	ARFCN (Absolute Frequency Channel Number) of the TCH carrier Note: <chann> = h indicates frequency hopping.
TS	Timeslot number
timAdv	Timing advance in bits
PWR	Current power level
dBm	Receiving level of the traffic channel carrier in dBm
Q	Receiving quality (0-7)
ChMod	Channel mode (--: Signalling, S_HR: Half rate, S_FR: Full rate, S_EFR: Enhanced Full Rate, A_HR: AMR Half rate, A_FR: AMR Full rate)

8.9.2 Service states

Depending on the service state, an additional textual output is generated (refer also to the response examples):

- 'Searching' - The MS is searching, but could not (yet) find a suitable cell. This output appears after restart of the MS or after loss of coverage.
- 'No connection' - The MS is camping on a cell and registered to the network. The service state is 'idle', i.e. there is no connection established or a dedicated channel in use.
- 'Cell Reselection' - The MS has not yet lost coverage but is searching for a better cell, since the cell reselection criterion is fulfilled.
- 'Limited Service' - The MS is camping on a cell but not registered to the network. Only emergency calls are allowed. The MS enters this state, for example, when
  - no SIM card is inserted, or PIN has not been given,
  - neither Home PLMN nor any other allowed PLMN are found,
  - registration request was not answered or denied by the network (use command AT+CREG to query the registration status),
  - authentication failed.

8.10 AT^MONP Monitor neighbor cells

The AT^MONP supplies information of up to six neighbor cells. There are two ways to retrieve the information: once on request by using the execute command or automatically every <period> seconds by using the write command. To stop the periodic presentation type "AT" or "at".

Syntax

Test Command

AT^MONP=?

Response(s)

^MONP: (list of supported <period>s)
OK

Exec Command

AT^MONP

Response(s)

See: Section 8.10.1, AT^MONP responses
OK

Write Command

AT^MONP=<period>

Response(s)

See: Section 8.10.1, AT^MONP responses
OK
ERROR
+CME ERROR: <err>

PIN	ASC0	ASC1	USB	MUX1	MUX2	MUX3	Charge	✈	Last
-	+	+	+	+	+	+	-	-	-

Parameter Description

<period>(num)

Display period in seconds

1...254

Notes

- During a connection some neighbor cell parameters cannot be updated. Therefore, the parameters MCC, MNC, C1 and C2 equal zero until the connection is released.
- To some extent, the cell monitoring command AT^SMONC covers the same parameters. The receiving level, for example, can be queried with both commands. Yet the resulting values may be slightly different, even though obtained over a time period of a few seconds. This is quite normal and nothing to worry about, as the cell information is permanently updated.
- For compatibility with earlier products and to support legacy applications, any input character may be used to stop the output in certain cases (depending on the settings of AT+IPR and AT+CMUX).
- If the ME is Java controlled, periodic retrieval of cell information using the write command AT^MONP=<period> is not supported. If periodic cell information is required simply repeat the execute commands at regular intervals.

8.10.1 AT^MONP responses

Response of AT^MONP (Example):

```
chann rs  dBm MCC MNC BCC  C1  C2
 653  26  -84 262  07   0  22  22
 660  20  -90 262  07   3  16  16
 687  19  -91 262  07   1  15  15
 678  14  -96 262  07   3  10  10
 671  14  -96 262  07   1  10  10
 643  10 -100 262  07   7   6   6
```

Column	Description
Chann	ARFCN (Absolute Radio Frequency Channel Number) of the BCCH carrier
rs	RSSI value 0 - 63 (RSSI = Received signal strength indication)
dBm	Receiving level in dBm
MCC	Mobile Country Code (first part of the PLMN code)
MNC	Mobile Network Code (second part of the PLMN code)
BCC	Base Station colour code
C1	cell selection criterion
C2	cell reselection criterion

8.11 AT^SMONG GPRS Monitor

The AT^SMONG command supplies GPRS specific cell information. There are two ways to retrieve the information: once on request by using the execute command or automatically every <period> seconds by using the write command. To stop the periodic presentation type "AT" or "at".

Syntax

Test Command

AT^SMONG=?

Response(s)

^SMONG: (list of supported <table>s), (list of supported <period>s)
OK
ERROR
+CME ERROR: <err>

Exec Command

AT^SMONG

Response(s)

GPRS Monitor
Cell Info Table (see: Section 8.11.1, AT^SMONG Cell Info Table)
OK
ERROR
+CME ERROR: <err>

Write Command

AT^SMONG=<table>[, <period>]

Response(s)

^SMONG: GPRS Monitor
Cell Info Table (see: Section 8.11.1, AT^SMONG Cell Info Table)
OK
ERROR
+CME ERROR: <err>

PIN	ASC0	ASC1	USB	MUX1	MUX2	MUX3	Charge	✈	Last
+	+	+	+	+	+	+	-	-	-

Parameter Description

<table>(num)

1	Cell Info Table

<period>(num)

Display period in seconds
If <period> is omitted the cell data will be presented only once on a single line (as if Execute command was issued).
If <period> is given, the cell data will be listed repeatedly on 10 data lines. Every 10th data line is followed by the header, simply to repeat the column titles.

1...100

Notes

- For compatibility with earlier products and to support legacy applications, often any input character will stop the periodic output of the write command. But since this applies only in certain cases (depending on the settings of AT+IPR and AT+CMUX), it is recommended to always use "at" or "AT".
- If the ME is Java controlled, periodic retrieval of cell information using the write command AT^SMONG=<table>,<period> is not supported. If periodic cell information is required simply repeat the execute commands at regular intervals.

8.11.1 AT^SMONG Cell Info Table

Example output for AT^SMONG:

```
GPRS Monitor
BCCH  G  PBCCH  PAT MCC  MNC  NOM  TA      RAC          # Cell  #
0637  1  -      4   234  05   2    00      0B
```

Columns of the cell info table:

Column	Description
BCCH	ARFCN of BCCH carrier
G	GPRS status: 0 GPRS not available in currently used cell 1 GPRS available in currently used cell 2 GPRS attached Note: If the network uses the PBCCH, the correct value can only be displayed if the TC65i is attached.
PBCCH	If PBCCH is present, indication of ARFCN, else "-" or if Frequency Hopping is used "H"
PAT	Priority Access Threshold (GSM Rec. 04.08 / 10.5.2.37b) 0 Packet access is not allowed in the cell 1 Spare, shall be interpreted as "000" (packet access not allowed) 2 Spare, shall be interpreted as "000" (packet access not allowed) 3 Packet access is allowed for priority level 1 4 Packet access is allowed for priority level 1 to 2
MCC	Mobile Country Code
MNC	Mobile Network Code
NOM	Network Operation Mode (1...3)
TA	Timing Advance Value
RAC	Routing Area Code (as hexadecimal value)

8.12 AT^SALS Alternate Line Service

The AT^SALS command is designed to support Alternate Line Service. This allows the subscriber to use two voice numbers on the same SIM card (service requires a dual line SIM card).
The write command enables or disables the presentation of <view> and specifies the <line> used for outgoing calls. The read command returns the presentation mode of <view> and the currently selected <line>.

Syntax

Test Command

AT^SALS=?

Response(s)

^SALS: (list of supported <view>s), (list of supported <line>s)
OK

Read Command

AT^SALS?

Response(s)

^SALS: <view>, <line>
OK
ERROR

Write Command

AT^SALS=<view>[, <line>]

Response(s)

OK
ERROR

PIN	ASC0	ASC1	USB	MUX1	MUX2	MUX3	Charge	✈	Last
+	+	+	+	+	+	+	-	-	-

Unsolicited Result Code

If switched on with <view>=1:

^SALS: <line>

Indicates the line used by an incoming call.

Parameter Description

<view>(num)

Controls the presentation mode of the URC "^SALS" which indicates the line number used by an incoming call:

0(&F)(P)	Disables indication of the called line
1	Enables indication of the called line

<line>(num)

Selects the line to be used for outgoing calls. Setting is global for the ME and non volatile.

1(&F)(D)	ALS Line 1
2	ALS Line 2

Note

- If a non ALS SIM is inserted, the <line> will be reset to line 1.

Example

AT^SALS=1,1 RING ^SALS: 2	Line 1 has been selected for outgoing calls. "^SALS" URC is enabled. You receive a notification that you have an incoming call on line 2.

8.13 AT^SHOM Display Homezone

The AT^SHOM returns the homezone state. The result is valid only, if network registration state <stat> is 1 (registered) (see AT+CREG).
The feature is available only for supported network operators (O2 Germany) and requires a suitable SIM card. If the homezone feature is not supported by the network operator or SIM card, result is always 0.

Syntax

Test Command

```
AT^SHOM=?
```

Response(s)

```
OK
```

Exec Command

```
AT^SHOM
```

Response(s)

```
^SHOM: <homezonestate>
OK
ERROR
+CME ERROR: <err>
```

PIN	ASC0	ASC1	USB	MUX1	MUX2	MUX3	Charge	✈	Last
+	+	+	+	+	+	+	-	-	-

Parameter Description

<homezonestate>(num)	
0	ME is out of Homezone and Cityzone
1	ME is within the Homezone
2	ME is within the Cityzone

8.14 AT^SPLM Read the PLMN list

The AT^SPLM execute command returns the list of operators from the ME. Each operator code <numeric> that has an alphanumeric equivalent <alpha> in the ME memory is returned. The list is sorted by operator codes. See also GSM 07.07: AT+COPN, AT+COPS

Syntax

Test Command

AT^SPLM=?

Response(s)

OK
If error is related to ME functionality:
ERROR
+CME ERROR: <err>

Read Command

AT^SPLM?

Response(s)

^SPLM:<range>
OK
If error is related to ME functionality:
ERROR
+CME ERROR: <err>

Exec Command

AT^SPLM

Response(s)

^SPLM:<numeric>, long <alpha>
^SPLM:[...]
OK
If error is related to ME functionality:
ERROR
+CME ERROR: <err>

Write Command

AT^SPLM=<index>

Response(s)

^SPLM:<numeric>, long <alpha>
OK
If error is related to ME functionality:
ERROR
+CME ERROR: <err>

PIN	ASC0	ASC1	USB	MUX1	MUX2	MUX3	Charge	✈	Last
+	+	+	+	+	+	+	-	+	-

Reference(s)

GSM 07.07

Command Description

The read command returns the range of operator indices supported by the ME.

The write command serves to read a single operator entry specified with <index>. The operator will be indicated by operator code <numeric> and name <alpha>.

Parameter Description

`<numeric>`(str)

Operator in numeric form; GSM location area identification number

`<alpha>`(str)

Operator in long alphanumeric format; can contain up to 26 characters

`<range>`(num)

Range of supported operator indices

`<index>`(num)

Index of the operator entry to be retrieved with the write command

Note

- If the ME is Java controlled, take into account that the AT Command API can handle responses up to a length of 1024 bytes. To avoid any longer responses it is recommended not to read the entire range of PLMN entries at a time.

8.15 AT+CPOL Preferred Operator List

The AT+CPOL read command returns the list of the preferred operators. The AT+CPOL write command allows to edit the list of the preferred operators. If <index> is given but <operator> is left out, the entry is deleted.

Syntax

Test Command

```
AT+CPOL=?
```

Response(s)

```
+CPOL:(list of supported <index>s), (list of supported <format>s)
OK
ERROR
+CME ERROR: <err>
```

Read Command

```
AT+CPOL?
```

Response(s)

```
+CPOL: <index>, <format>, <operator>
+CPOL: ...
OK
ERROR
+CME ERROR: <err>
```

Write Command

```
AT+CPOL=<index>[, <format>, <operator>]
```

Response(s)

```
OK
ERROR
+CME ERROR: <err>
```

PIN	ASC0	ASC1	USB	MUX1	MUX2	MUX3	Charge	✈	Last
+	+	+	+	+	+	+	-	+	-

Reference(s)

GSM 07.07

Parameter Description

<index>(num)

The order number of the operator in the SIM preferred operator list.

<format>(num)

2	Numeric format

<operator>(str)

Operator in numeric format (GSM Location Area Identification number which consists of a 3-digit country code plus a 2- or 3-digit network code).

Note

- If you enter AT+CPOL=? immediately after the CHV, you get the URC: "+CME ERROR: operation not allowed". In addition the AT+CPOL command is blocked until the ME is restarted. You get at any time the faulty response: "+CME ERROR: operation not allowed". The preferred operator list will not be shown.
  To avoid this problem and to check the status of SIM initialization after CHV you can activate the "^SIND: sim-status" URC provided by AT^SIND.

9. Supplementary Service Commands

The AT Commands described in this chapter are related to the Supplementary Services offered by the GSM network.

9.1 AT+CACM Accumulated call meter (ACM) reset or query

Syntax

Test Command
AT+CACM=?
Response(s)
OK

Read Command
AT+CACM?
Response(s)
+CACM: <acm> OK ERROR +CME ERROR: <err>

Write Command
AT+CACM=[<passwd>]
Response(s)
OK ERROR +CME ERROR: <err>

PIN	ASC0	ASC1	USB	MUX1	MUX2	MUX3	Charge	✈	Last
+	+	+	+	+	+	+	-	+	-

Reference(s)

GSM 07.07

Command Description

The read command returns the current ACM value.

The write command resets the Advice of Charge related to the accumulated call meter (ACM) value in SIM file EF(ACM). ACM contains the total number of home units for both the current and preceding calls.

Parameter Description

<acm>(str)

Three bytes of the current ACM value in hexadecimal format (e.g. "00001E" indicates decimal value 30) 000000 - FFFFFF.

<passwd>(str)

SIM PIN2

9.2 AT^SACM Advice of charge and query of ACM and ACMmax

Syntax

Test Command

```
AT^SACM=?
```

Response(s)

```
^SACM:(list of supported <n>s)
OK
```

Exec Command

```
AT^SACM
```

Response(s)

```
^SACM: <n>,<acm>,<acmMax>
OK
ERROR
+CME ERROR: <err>
```

Write Command

```
AT^SACM=<n>
```

Response(s)

```
OK
ERROR
+CME ERROR: <err>
```

PIN	ASC0	ASC1	USB	MUX1	MUX2	MUX3	Charge	✈	Last
+	+	+	+	+	+	+	-	+	-

Unsolicited Result Code

```
+CCCM: <ccm>
```

When activated, an unsolicited result code is sent when the CCM value changes, but not more often than every 10 seconds.

Command Description

The execute command can be used to query the current mode of the Advice of Charge supplementary service, the SIM values of the accumulated call meter (ACM) and accumulated call meter maximum (ACMmax).

The write command enables or disables the presentation of unsolicited result codes to report the call charges.

Parameter Description

<n>(num)(&W)(&V)

[0](&F)	suppress unsolicited result code
1	display unsolicited result code

<acm>(str)(&V)

Three bytes of the current ACM value in hexadecimal format (e.g. "00001E" indicates decimal value 30) 000000-FFFFFF

<acmMax>(str)(&V)

Three bytes of the max. ACM value in hexadecimal format (e.g. "00001E" indicates decimal value 30) 000000 disable ACMmax feature 000001-FFFFFF

<ccm>(str)

Three bytes of the current CCM value in hexadecimal format (e.g. "00001E" indicates decimal value 30); bytes are coded in the same way as ACMmax value in the SIM 000000-FFFFFF

Notes

- When you power down or reset the ME with AT+CFUN=1,1 the URC presentation mode will be reset to its default. To benefit from the URC it is recommended to have the setting included in the user profile saved with AT&W, or to select <n>=1 every time you reboot the ME.
- See also GSM07.07: AT+CACM, AT+CAMM, AT+CAOC.

9.3 AT+CAMM Accumulated call meter maximum (ACMmax) set or query

Syntax

Test Command

```
AT+CAMM=?
```

Response(s)

```
OK
```

Read Command

```
AT+CAMM?
```

Response(s)

```
+CAMM: <acmmax>
OK
ERROR
+CME ERROR: <err>
```

Write Command

```
AT+CAMM=<acmmax>[, <passwd>]
```

Response(s)

```
OK
ERROR
+CME ERROR: <err>
```

PIN	ASC0	ASC1	USB	MUX1	MUX2	MUX3	Charge	✈	Last
+	+	+	+	+	+	+	-	+	-

Reference(s)

GSM 07.07

Command Description

The read command returns the current ACMmax value.

The write command sets the Advice of Charge related to the accumulated call meter maximum value in SIM file EF (ACMmax). ACMmax contains the maximum number of home units allowed to be consumed by the subscriber.

Parameter Description

`<acmmax>`(str)

Three bytes of the max. ACM value in hexadecimal format (e.g. "00001E" indicates decimal value 30) 000000 disable ACMmax feature 000001-FFFFFF.

`<passwd>`(str)

SIM PIN2

9.4 AT+CAOC Advice of Charge information

Syntax

Test Command

AT+CAOC=?

Response(s)

+CAOC: (list of supported<mode>s)
OK

Read Command

AT+CAOC?

Response(s)

+CAOC: <mode>
OK

Exec Command

AT+CAOC

Response(s)

ERROR
+CME ERROR: <err>
If <mode>=0, TA returns the current call meter value:
+CAOC: <ccm>
OK

Write Command

AT+CAOC=[<mode>]

Response(s)

ERROR
+CME ERROR: <err>
If <mode>=0, TA returns the current call meter value.
OK

PIN	ASC0	ASC1	USB	MUX1	MUX2	MUX3	Charge	✈	Last
+	+	+	+	+	+	+	-	+	-

Reference(s)

GSM 07.07

Command Description

Execute command returns the current call meter value.

The write command sets the Advice of Charge supplementary service function mode.

Parameter Description

<mode>(num)(&V)

0	query CCM value

<ccm>(str)

Three bytes of the current CCM value in hexadecimal format (e.g. "00001E" indicates decimal value 30); bytes are similarly coded as ACMmax value in the SIM 000000-FFFFFF.

9.5 AT+CCUG Closed User Group

Syntax

Test Command

AT+CCUG=?

Response(s)

list of supported <n>, range of supported <index>, range of supported <info>
OK
ERROR
+CME ERROR: <err>

Read Command

AT+CCUG?

Response(s)

+CCUG:<n>, <index>, <info>
OK
ERROR
+CME ERROR: <err>

Write Command

AT+CCUG=[[<n>][, <index>][, <info>]]

Response(s)

OK
ERROR
+CME ERROR: <err>

PIN	ASC0	ASC1	USB	MUX1	MUX2	MUX3	Charge	✈	Last
+	+	+	+	+	+	+	-	+	-

Reference(s)

GSM 07.07, GSM 02.85, GSM 03.85, GSM 04.85

Command Description

The Test command returns the supported parameters.

The Read command returns if the Explicit CUG invocation is activated (in parameter <n>), which CUG <index> is chosen, and if Preferential Group or Outgoing Access is suppressed (in parameter <info>).

The write command serves to activate or deactivate the explicit CUG invocation, to set the desired index, and to specify if Preferential Group or Outgoing Access shall be suppressed.

Parameter Description

<n>(num)

explicit CUG invocation options	
0(D)	Deactivate explicit CUG invocation
1	Activate explicit CUG invocation

<index>(num)

0-9	explicit selection of CUG index
10(D)	No index (preferred CUG taken from subscriber data)

<info>(num)	
state of the call	
0(D)	no information
1	suppress outgoing access
2	suppress preferential CUG
3	Suppress preferential CUG and Outgoing Access.

Notes

- The active settings for omitted parameters are retained without changes.
- Explicit CUG invocation means that at each call setup, CUG information is added to the called number.
- Upon delivery, settings are predefined with
  <n>=0,
  <index>=10,
  <info>=0.
  These delivery defaults cannot be recalled automatically.
- When starting a call with ATD, Parameter 'G' or 'g' of command ATD will have no effect if the option selected for this single call is identical to the option already selected with AT+CCUG.
- Current settings are saved in the ME automatically.
- ATZ or AT&F do not influence the current settings.
- some combinations of parameters may lead to rejection of CUG calls by the network. For more information, please consult GSM 04.85

9.6 AT+CCFC Call forwarding number and conditions control

AT+CCFC controls the call forwarding supplementary service. Registration, erasure, activation, deactivation and status query are supported.

Syntax

Test Command

AT+CCFC=?

Response(s)

+CCFC: (list/range of supported <reason>s)
OK

Write Command

AT+CCFC=<reason>, <mode>[, <number>[, <type>[, <class>[, <time>]]]]

Response(s)

If <mode> is not equal 2 and command successful:
OK
If <mode>= 2, <reason> is not equal 2 and command successful:
+CCFC: <status>, <class>[, <number>, <type>]
OK
If <mode>= 2, <reason>= 2 and command successful:
+CCFC: <status>, <class>[, <number>, <type>, <time>]
OK
If error is related to ME functionality
ERROR
+CME ERROR: <err>

PIN	ASC0	ASC1	USB	MUX1	MUX2	MUX3	Charge	✈	Last
+	+	+	+	+	+	+	-	-	-

Reference(s)

GSM 07.07, GSM 02.04, GSM 02.82, GSM 03.82, GSM 04.82

Parameter Description

<reason>(num)

Reason for call forwarding

0	unconditional
1	mobile busy
2	no reply
3	not reachable
4	all call forwarding (includes reasons 0, 1, 2 and 3)
5	all conditional call forwarding (includes reasons 1, 2 and 3)

<mode>(num)

Network operation to be performed for Supplementary service "call forwarding"

0	disable call forwarding (disable service)
1	enable call forwarding (enable service)
2	query status of call forwarding (query service status)
3	register <number> and activate call forwarding (register service)
4	erase <number> and deactivate call forwarding (erase service)

<number>(str)

String type phone number of forwarding address in format specified by <type>. If you select <mode>= 3, the phone <number> will be registered in the network. This allows you to disable / enable CF to the same destination without the need to enter the phone number once again. Depending on the services offered by the provider the registration may be mandatory before CF can be used. The number remains registered in the network until you register another number or erase it using <mode> = 4.

<type>(num)	
Type of address octect	
145	dialing string <number> includes international access code character '+'
129	otherwise

<class>(num)	
Integer or sum of integers each representing a class of information, i.e. a bearer service, telecommunication service or bearer service group as defined in "GSM 02.04"	
1	voice
2	data <class> 2 (data) comprises all those <class> values between 16 and 128, that are supported both by the network and the MS. This means, a setting made for <class> 2 applies to all remaining data classes (if supported). In addition, you can assign a different setting to a specific class. For example, you can activate Call Forwarding for all data classes, but deactivate it for a specific data class.
4	fax
8	SMS
16	data circuit sync
32	data circuit async
64	dedicated packet access
128	dedicated PAD access
1...[7]...255	combination of some of the above classes. For example, the default setting 7 represents the sum of the integers 1, 2 and 4 (CF for voice, data and fax). The value 255 covers all classes. If the <class> parameter is omitted, the default value 7 is used.

<time>(num)	
5...[20]...30	Time to wait before call is forwarded, rounded to a multiple of 5 sec. (only for <reason>=no reply)

<status>(num)	
0	Call Forwarding not active
1	Call Forwarding active

Notes

- You can register, disable, enable and erase <reason> 4 and 5 as described above. However, querying the status of <reason> 4 and 5 with AT+CCFC will result in an error ("+CME ERROR: operation not supported"). As an alternative, you may use the ATD command followed by *'# codes to check the status of these two reasons. See Star-Hash (*#) Network Commands for a complete list of *# GSM codes. See also examples below.
- Most networks will not permit registration of new parameters for conditional call forwarding (reasons 1,2,3,5) while unconditional call forwarding is enabled.

- The AT+CCFC command offers a broad range of call forwarding options according to the GSM specifications. However, when you attempt to set a call forwarding option which is not provisioned or not yet subscribed to, the setting will not take effect regardless of the response returned. The responses in these cases vary with the network (for example "OK", "Operation not allowed", "Operation not supported" etc.). To make sure check the call forwarding status with <mode>=2.
- Some networks may choose to have certain call forwarding condtions permanently enabled (e.g. forwarding to a mailbox if the mobile is not reachable). In this case, erasure or deactivation of call forwarding for these conditions will not be successful, even if the CCFC request is answered with response "OK".
- The command has been implemented with the full set of <class> parameters according to GSM 07.07. For actual applicability of SS "call forwarding" to a specific service or service group (a specific <class> value) please consult table A.1 of GSM 02.04.
- There is currently no release of GSM standard "GSM 02.04", in which the "Call Forwarding" Supplementary Service is defined as applicable to SMS services.

Example

Please note that when you configure or query call forwarding without specifying any classes, the settings will refer to classes 1, 2 and 4 only (=default). The handling of classes is equivalent to AT+CLCK.

- To register the destination number for unconditional call forwarding (CFU):

```
at+ccfc=0,3,"+493012345678",145
OK
```

The destination number will be registered for voice, data and fax services (default <class> 7).
In most networks, the registration will also cause call forwarding to be activated for these <class> values.

- To query the status of CFU without specifying <class>:

```
at+ccfc=0,2
+CCFC: 1,1,"+493012345678",145
+CCFC: 1,2,"+493012345678",145
+CCFC: 1,4,"+493012345678",145
OK
```

- To deactivate CFU without specifying <class>:

```
at+ccfc=0,0
OK
```

To check whether CFU was successfully deactivated (note that the destination number remains registered in the network when you disable CFU):

```
at+ccfc=0,2
+CCFC: 0,1,"+493012345678",145
+CCFC: 0,2,"+493012345678",145
+CCFC: 0,4,"+493012345678",145
OK
```

- To erase the registered CFU destination number:

```
at+ccfc=0,4
OK
```

Now, when you check the status, no destination number will be indicated:

```
at+ccfc=0,2
+CCFC: 0,1
+CCFC: 0,2
+CCFC: 0,4
OK
```

- To query the status of CFU for all classes:

```
at+ccfc=0,2,,,255
+CCFC: 0,1
+CCFC: 0,2
+CCFC: 0,4
+CCFC: 0,8
+CCFC: 0,16
+CCFC: 0,32
+CCFC: 0,64
+CCFC: 0,128
OK
```

- <reason> 4 or 5 cannot be used to query the status of all call forwarding reasons (see also notes above):

```
at+ccfc=4,2
+CME ERROR: operation not supported
at+ccfc=5,2
+CME ERROR: operation not supported
```

9.7 AT+CCWA Call Waiting

The AT+CCWA write command controls the "Call Waiting" supplementary service according to GSM 02.83. Activation, deactivation and status query are supported. The read command returns the current value of <n>.

Syntax

Test Command

AT+CCWA=?

Response(s)

+CCWA: (list of supported <n>s)
OK

Read Command

AT+CCWA?

Response(s)

+CCWA: <n>
OK

Write Command

AT+CCWA=[[<n>][, <mode>][, <class>]]

Response(s)

If <mode> is not equal 2 and command successful:
OK
If <mode>= 2 and command successful:
+CCWA: <status>, <class>
[+CCWA: <status>, <class>]
[+CCWA: ...]
OK
If error is related to ME functionality
+CME ERROR: <err>

PIN	ASC0	ASC1	USB	MUX1	MUX2	MUX3	Charge	✈	Last
+	+	+	+	+	+	+	-	-	-

Reference(s)

GSM 07.07, GSM 02.04, GSM 02.83, GSM 03.83, GSM 04.83

Unsolicited Result Codes

URC 1

Indication of a call that is currently waiting and can be accepted.

+CCWA: <calling number>, <type of number>, <class>, , <CLI validity>

If <n>=1 and the call waiting supplementary service is enabled in the network, URC "+CCWA" indicates a waiting call to the TE. It appears while the waiting call is still ringing.

URC 2

Indication of a call that has been waiting.

^SCWA:

If <n>=1 and the call waiting supplementary service is enabled in the network, this URC indicates that a waiting call rang when the ME was in online mode during a CSD call, but the calling party hung up before the ME went back to command mode.

Parameter Description

<n>(num)

Switch URCs "+CCWA" and "^SCWA" for call waiting on/off

0	Disable display of URCs "+CCWA" and "^SCWA"
1	Enable display of URCs "+CCWA" and "^SCWA"

<mode>(num)

Network operation to be performed for Supplementary service call waiting

0	Disable call waiting (disable service)
1	Enable call waiting (enable service)
2	Query status of call waiting (query service status)

<class>(num)

Integer or sum of integers each representing a class of information, i.e. a bearer service, telecommunication service or bearer service group as defined in "GSM 02.04".
In the write command, parameter <class> specifies the class of the active call during which an incoming call of any class is to be regarded as a waiting call.
In URC "+CCWA: <calling number>, <type of number>, <class>, , <CLI validity>", parameter <class> specifies the class of the waiting call.

1	Voice
2	Data <class> 2 (data) comprises all those <class> values between 16 and 128, that are supported both by the network and the MS. This means, a setting made for <class> 2 applies to all remaining data classes (if supported). In addition, you can assign a different setting to a specific class. For example, you can activate call waiting for all data classes, but deactivate it for a specific data class.
4	Fax
[7]	Voice, data and fax (1+2+4)
16	Data circuit sync
32	Data circuit async
64	Dedicated packet access
128	Dedicated PAD access
1...[7]...255	Combination of some of the above classes. For example, the default setting 7 represents the sum of the integers 1, 2 and 4 (CF for voice, data and fax). The value 255 covers all classes. If parameter "class"is omitted, the default value 7 is used.

<status>(num)

0	Call waiting service is not active
1	Call waiting service is active

<calling number>(str)

Phone number of waiting caller in the format specified by parameter <type of number>.

<type of number>(num)

Type of address octet in integer format (refer to GSM 04.08, subclause 10.5.4.7)

145	<calling number> includes international access code character '+'

128	number restricted
129	Otherwise

<CLI validity>(num)	
0	CLI valid
1	CLI has been withheld
2	CLI is not available

Notes

- If the active call is a CSD call, and a waiting call is received, then the ME produces a BREAK while still in online mode, and displays
  - the +CCWA URC (as above) when the ME goes back to command mode while the waiting call is still active and can be accepted;
  - or the ^SCWA URC (as above) when the ME goes back to command mode after the waiting call has ended.
- With the AT+CHLD command, it is possible to establish a multiparty call or to set the active voice call on hold and then accept a waiting voice call (not possible with fax and data call). See also AT+CHLD
- Users should be aware that if call waiting is activated (<mode>=1), the presentation of URCs needs to be enabled, too (<n>=1).
  Otherwise, on the one hand, a waiting caller would be kept waiting due to lack of BUSY signals, while, on the other hand, the waiting call would not be indicated to the called party.
- The AT+CCWA command offers a broad range of options according to the GSM specifications. However, when you attempt to enable call waiting for a <class> for which the service is not provisioned or not supported , the setting will not take effect regardless of the response returned. The responses in these cases vary with the network (for example "OK", "Operation not allowed", "Operation not supported" etc.). To make sure check the current call waiting settings with <mode>=2.
- The AT+CCWA command has been implemented with the full set of <class> parameters according to GSM 07.07. For actual applicability of SS call waiting to a specific service or service group (a specific <class> value) please consult table A.1 of GSM 02.04
- Despite the specifications stated in GSM 02.04 call waiting is not handled uniformly among all networks:
  GSM 02.04, Annex A, provides the following specification:
  "The applicability of call waiting refers to the telecommunication service of the active call and not of the waiting call. The incoming, waiting, call may be of any kind." Nevertheless, networks do differ on the actual implementation of the service. For example, the activation of call waiting for <class> 4, "fax", causes some networks to send a call waiting indication if a call "of any kind" comes in during an active fax call, but others may (with the same settings active) indicate a waiting fax call during any kind of active call. Thus, the only reliable way to receive or prevent a call waiting indication under any circumstances and in any network, is to activate or deactivate call waiting for all tele- and bearer services (<class> 255).

Examples

EXAMPLE 1

Parameter <n>

at+ccwa=1	To enable the presentation of the URC
OK	

EXAMPLE 2

Parameter <mode>

at+ccwa=,1	To activate the supplementary service in the network for voice, data, and fax calls (default classes). Note that parameter <n> is left out. In this case, the current value of <n> will be retained.
OK	
at+ccwa=,2	To query the network status of call waiting for default classes
at+ccwa=1,1	Call Waiting is activated during voice calls.
at+ccwa=1,2	Call Waiting is activated during data calls.
at+ccwa=1,4	Call Waiting is activated during fax calls.
OK	

EXAMPLE 3

Parameter <class>

AT+CCWA=,0,1	To deactivate call waiting for voice calls.
OK	

9.8 AT+CHLD Call Hold and Multiparty

Syntax

Test Command
AT+CHLD=?
Response(s)
+CHLD: (list of supported <n>s) OK

Write Command
AT+CHLD=[<n>]
Response(s)
OK ERROR +CME ERROR: <err>

PIN	ASC0	ASC1	USB	MUX1	MUX2	MUX3	Charge	✈	Last
+	+	+	+	+	+	+	-	-	-

Reference(s)
GSM 07.07

Command Description

TA controls the Supplementary Services Call Hold and Multiparty. Calls can be put on hold, recovered, released, and added to a conversation.
Like for all Supplementary Services, the availability and detailed functionality of Call Hold and Multiparty services depends on the configuration of the GSM network. The TC65i can only request the service, but the network decides whether and how the request will be answered.

Parameter Description

<n>(num)	
0	Release all held calls or set User Determined User Busy (UDUB) for a waiting call: • If a call is waiting, release the waiting call. The calling party will receive a "BUSY" indication (Supplementary Service User Determined User Busy "UDUB") • Otherwise, terminate all held calls (if any).
1	Terminate all active calls (if any) and accept "the other call" as the active call: • If a call is waiting, the waiting call will be accepted. • Otherwise, if a held call is present, the held call becomes active.
1X	Terminate a specific call X (X= 1-7). The call may be active, held or waiting. The remote party of the terminated call will receive a "NO CARRIER" indication. Parameter X is the call number <idx> of the targeted call in the list of current calls available with AT command AT+CLCC.
2	Place all active calls on hold (if any) and accept "the other call" as the active call: • If a call is waiting, the waiting call will be accepted. • Otherwise, if a held call is present, the held call becomes active.
2X	Place all active calls except call X (X= 1-7) on hold. Parameter X is the call number <idx> of the targeted call in the list of current calls available with AT command AT+CLCC.
3	Add a held call to the active calls in order to set up a conference (multiparty) call.

Notes

- The AT+CHLD command offers a broad range of options according to the GSM specifications. However, if you attempt to invoke an option which is not provisioned by the network, or not subscribed to, invocation of this option will fail. The responses in these cases may vary with the network (for example "Operation not allowed", "Operation not supported" etc.).
- The handling of the supplementary service Call hold and Multiparty varies with the types of calls. This is because only voice calls can be put on hold, while data or fax calls cannot. The following procedures apply: With AT+CHLD=2 the user can simultaneously place a voice call on hold and accept another waiting voice, data or fax call. If the waiting call is a data or fax call, it is also possible to put the voice call on hold. To switch back from the active data or fax call to the held voice call the active call must be terminated with AT+CHLD=1. If all active and held calls are voice calls it is possible to switch back and forth with AT+CHLD=2.
- In conflict situations, e.g. when a waiting call comes while there are already held calls, the above procedures apply to the waiting call only. For example, <n>=0 rejects the waiting call, but does not affect the held calls.
- See also the AT+CCWA command for details on how to display waiting calls.

Example

```
^SYSSTART
at+cpin="9999"
OK
+CREG: 2
+CREG: 1,"0145","0016"                  The mobile is now registered.
at+ccwa=1,1,1                           You activate the indication of waiting calls during
                                        voice calls.
OK
atd"1234567";                           You make a voice call.
OK
+CCWA: "+491791292364",145,32,,0        You receive a URC indicating a waiting data call.
at+chld=2                               You put the voice call on hold.
CONNECT 9600/RLP                        The data connection is set up.
hello
+++                                     With "+++" you go in command mode.
OK
at+clcc                                 You interrogate the status of all established calls.
+CLCC: 1,0,1,0,0,"03038639268",129
+CLCC: 2,1,0,1,0,"+491791292364",145
OK
at+chld=1                               The active data call is terminated and the held voice
                                        call becomes active.
OK
at+clcc
+CLCC: 1,0,0,0,0,"03038639268",129
OK
```

9.9 AT+CLIP Calling Line Identification Presentation

This command refers to the GSM supplementary service CLIP (Calling Line Identification Presentation) that enables a called subscriber to get the calling line identity (CLI) of the calling party when receiving a mobile terminated call.
The AT+CLIP write command enables or disables the presentation of the CLI at the TE. It has no effect on the execution of the supplementary service CLIP in the network.
The AT+CLIP read command gives the status of <n>, and also triggers an interrogation of the provision status of the CLIP service according to GSM 02.81 (given in <m>). If no SIM card is available or the SIM-PIN is not entered, the command response is "ERROR".

Syntax

Test Command

```
AT+CLIP=?
```

Response(s)

```
+CLIP: (list of supported<n>s)
OK
```

Read Command

```
AT+CLIP?
```

Response(s)

```
+CLIP: <n>,<m>
OK
ERROR
+CME ERROR: <err>
```

Write Command

```
AT+CLIP=<n>
```

Response(s)

```
OK
ERROR
+CME ERROR: <err>
```

PIN	ASC0	ASC1	USB	MUX1	MUX2	MUX3	Charge	✈	Last
±	+	+	+	+	+	+	-	-	-

Reference(s)

GSM 07.07, GSM 02.81

Unsolicited Result Code

```
+CLIP: <number>, <type>[, , [, [<alpha>][, <CLI validity>]]]
```

When CLIP is enabled at the TE (and is permitted by the calling subscriber), this URC is delivered after every "RING" or "+CRING" URC when a mobile terminated call occurs.

Parameter Description

<n>(num)(&W)(&V)	
[0](&F)	Suppress unsolicited result codes
1	Display unsolicited result codes

<m>(num)(&V)	
0	CLIP not provisioned
1	CLIP provisioned
2	Unknown

<number>(str)

String type phone number of calling address in format specified by <type>.

<type>(num)

Type of address octet in integer format; 145 when dialing string includes international access code character "+",128 when number is restricted otherwise 129.

<alpha>(str)

String type alphanumeric representation of <number> corresponding to the entry found in phonebook; used character set is the one selected with AT+CSCS.

<CLI validity>(num)

0	CLI valid
1	CLI has been withheld by the originator.
2	CLI is not available due to interworking problems orlimitations of originating network. <number> shall be an empty string ("") and <type> value will not be significant.

When CLI is not available (<CLI validity>=2), <number> shall be an empty string ("") and <type> value will not be significant. Nevertheless, TA shall return the recommended value 128 for <type> (TON/NPI unknown in accordance with GSM 04.08 subclause 10.5.4.7).

When CLI has been withheld by the originator, (<CLI validity>=1) and the CLIP is provisioned with the "override category" option (refer GSM 02.81 and GSM 03.81), <number> and <type> is provided. Otherwise, TA shall return the same setting for <number> and <type> as if the CLI was not available.

9.10 AT+CLIR Calling Line Identification Restriction

The AT+CLIR command refers to the GSM supplementary service CLIR (Calling Line Identification Restriction).

Syntax

Test Command	
AT+CLIR=?	
Response(s)	
+CLIR: (list of supported <n>s) OK	

Read Command	
AT+CLIR?	
Response(s)	
+CLIR<n>, <m> OK ERROR +CME ERROR: <err>	

Write Command	
AT+CLIR=[<n>]	
Response(s)	
OK ERROR +CME ERROR: <err>	

PIN	ASC0	ASC1	USB	MUX1	MUX2	MUX3	Charge	✈	Last
+	+	+	+	+	+	+	-	-	-

Reference(s): GSM 07.07

Parameter Description

<n>(num)

Parameter shows the settings for outgoing calls:

[0](P)	Presentation indicator is used according to the subscription of the CLIR service
1	CLIR invocation
2	CLIR suppression

<m>(num)

Parameter shows the subscriber CLIR service status in the network:

0	CLIR not provisioned
1	CLIR provisioned in permanent mode
2	Unknown (e.g. no network, etc.)
3	CLIR temporary mode presentation restricted
4	CLIR temporary mode presentation allowed

Note

- The settings made with AT+CLIR=1 or AT+CLIR=2 are used for all outgoing calls until the ME is switched off or AT+CLIR=0 is used.

9.11 AT+COLP Connected Line Identification Presentation

This command refers to the GSM supplementary service COLP (Connected Line Identification Presentation) that enables a calling subscriber to get the connected line identity (COL) of the called party after setting up a mobile originated call. The command enables or disables the presentation of the COL at the TE. It has no effect on the execution of the supplementary service COLR in the network.

Syntax

Test Command

```
AT+COLP=?
```

Response(s)

```
+COLP:(list of supported <n>s)
OK
```

Read Command

```
AT+COLP?
```

Response(s)

```
+COLP: <n>,<m>
OK
ERROR
+CME ERROR: <err>
```

Write Command

```
AT+COLP=[<n>]
```

Response(s)

```
OK
ERROR
+CME ERROR: <err>
```

PIN	ASC0	ASC1	USB	MUX1	MUX2	MUX3	Charge	✈	Last
+	+	+	+	+	+	+	-	-	-

Reference(s)

GSM 07.07

Unsolicited Result Code

Call response format:

```
+COLP: <number>, <type>
```

Parameter Description

<n>(num)	
0	Disable - suppress unsolicited result codes
1	Enable - display unsolicited result codes

<m>(num)	
0	COLP not provisioned (no presentation)
1	COLP provisioned
2	Unknown

<number>(str)

String type phone number of connected address in format specified by <type>

<type>(num)

Type of address octet in integer format; 145 when dialling string includes international access code character "+", otherwise 129.

9.12 AT+CPUC Price per unit and currency table

Syntax

Test Command
AT+CPUC=?
Response(s)
OK

Read Command
AT+CPUC?
Response(s)
+CPUC: <currency>, <ppu> OK ERROR +CME ERROR: <err>

Write Command
AT+CPUC=<currency>, <ppu>[, <passwd>]
Response(s)
OK ERROR +CME ERROR: <err>

PIN	ASC0	ASC1	USB	MUX1	MUX2	MUX3	Charge	✈	Last
+	+	+	+	+	+	+	-	+	-

Reference(s)
GSM 07.07

Command Description

Read command returns the current parameters of PUC.

Write command sets the parameters of Advice of Charge related price per unit and currency table. SIM PIN2 is usually required to set the parameters.

Parameter Description

<currency>(str)(+CSCS)

Three-character currency code (e.g. "GBP", "EUR"). If the currency name is longer than three characters, all characters will be cut off after the third position. Before they are written to the SIM Card, these characters are converted to the standard GSM alphabet.

<ppu>(str)

Price per unit; dot is used as a decimal separator (e.g. "2.66"). The length is limited to 20 characters. If the string length is exceeded, the command is terminated with an error. This string may only contain digits and a dot. Leading zeros are removed from the string. The minimum and maximum value are determined by the structure of the SIM-PUCT file. The maximum price per unit value is 999 999 999.00. When successfully entered, this value is rounded to maximum accuracy.
Note: Due to storage in mantisse (range 0-4095) and exponent (-7 to 7) it is possible that rounding errors occur.

<passwd>(str)

SIM PIN2. String parameter which can contain any combination of characters. The maximum string length is limited to 8 characters. If this value is exceeded, the command terminates with an error message. If the PIN2 is incorrect, a CME error (+CME ERROR: incorrect password) is output.

Example

To change currency and/or price per unit you have two ways:

You can enter PIN2 along with the AT+CPUC command:

AT+CPUC="EUR","0.10","8888"	(where "8888" = PIN2)
OK	

Alternatively, you can first use the AT+CPIN2 command to enter PIN2. When you execute the AT+CPUC command, subsequently, take into account that PIN2 authentication expires after 300ms (see notes in AT+CPIN2).

AT+CPUC="EUR","0.10"	
OK	Successful
AT+CPUC="EUR","0.10"	
+CME ERROR: SIM PIN2 required	Attempt not successful. PIN2 authentication has expired.

9.13 AT+CSSN Supplementary service notifications

Syntax

Test Command
AT+CSSN=?
Response(s)
+CSSN: (list of supported<n>s), (list of supported<m>s) OK

Read Command
AT+CSSN?
Response(s)
+CSSN: <n>, <m> OK

Write Command
AT+CSSN=<n>[, <m>]
Response(s)
OK ERROR +CME ERROR: <err>

PIN	ASC0	ASC1	USB	MUX1	MUX2	MUX3	Charge	✈	Last
-	+	+	+	+	+	+	-	-	-

Reference(s)
GSM 07.07

Unsolicited Result Codes

URC 1

+CSSI: <code 1>

When <n>=1 and a supplementary service notification is received after a mobile originated call setup, intermediate result code "+CSSI: <code 1>" is sent to TE before any other MO call setup result codes

URC 2

+CSSU: <code 2>

When <m>=1 and a supplementary service notification is received during a mobile terminated call setup or during a call, unsolicited result code "+CSSU: <code 2>" is sent to TE.

Command Description

The write command enables or disables the presentation of URCs for supplementary services.

Parameter Description

<n>(num)	
0(&F)(P)	Suppress "+CSSI" URCs
1	Activate "+CSSI" URCs

<m>(num)	
0(&F)(P)	Suppress "+CSSU" URCs
1	Activate "+CSSU" URCs

<code 1>(num)	
0	unconditional call forwarding is active
1	some of the conditional call forwardings are active
2	call has been forwarded
3	Waiting call is pending

<code 2>(num)	
0	The incoming call is a forwarded call.
5	Held call was terminated by other party
10	additional incoming call forwarded

Note

- URCs will be displayed only if the call concerned is a voice call, but some URCs will be displayed as well as for data calls (like "+CSSU"=0).

9.14 AT+CUSD Unstructured supplementary service data

AT+CUSD allows control of the Unstructured Supplementary Service Data (USSD) according to GSM 02.90. Both network and mobile initiated operations are supported. The interaction of this command with other commands based on other GSM supplementary services is described in the GSM standard.

Parameter <n> is used to disable/enable the presentation of an unsolicited result code (USSD response from the network, or network initiated operation) "+CUSD: <m>[, <str_urc>[, <dcs>]]" to the TE.

When parameter <str_write> is given, a mobile initiated USSD string or a response USSD string to a network initiated operation is sent to the network. The response USSD string from the network is returned in a subsequent unsolicited result code "+CUSD"

Syntax

Test Command

```
AT+CUSD=?
```

Response(s)

```
+CUSD: (list of supported<n>s)
OK
```

Read Command

```
AT+CUSD?
```

Response(s)

```
+CUSD: <n>
OK
```

Write Command

```
AT+CUSD=<n>[, <str_write>[, <dcs>]]
```

Response(s)

```
OK
ERROR
+CME ERROR: <err>
```

PIN	ASC0	ASC1	USB	MUX1	MUX2	MUX3	Charge	✈	Last
+	+	+	+	+	+	+	-	-	+

Reference(s)

GSM 07.07, GSM 02.90, GSM 03.90, GSM 04.90

Unsolicited Result Code

```
+CUSD: <m>[, <str_urc>[, <dcs>]]
```

URC "+CUSD" indicates an USSD response from the network, or network initiated operation

Parameter Description

<n>(num)

0(&F)	Disable the result code presentation in the TA
1	Enable the result code presentation in the TA
2	Cancel session (not applicable to read command response)

<str_write>(str)

String type USSD-string (when <str_write> parameter is not given, network is not interrogated).
For the write command, only <dcs>= 15 is supported.

<str_urc>(str)(+CSCS)

String type USSD-string .
If <dcs> indicates that GSM 03.38 default alphabet is used TA converts GSM alphabet into current TE character set according to rules of GSM 07.05 Annex A. Otherwise in case of invalid or omitted <dcs> conversion of <str_urc> is not possible.

<dcs>(num)

GSM 03.38 Cell Broadcast Data Coding Scheme in integer format (default 15). In case of an invalid or omitted <dcs> from the network side (MT) <dcs> will not be given out.

<m>(num)

0	No further user action required (network initiated USSD-Notify, or no further information needed after mobile initiated operation)
1	Further user action required (network initiated USSD-Request, or further information needed after mobile initiated operation). If <m>=1, then the URC ends with ">" to prompt the user for input. The user action is finished with <CTRL-Z> or aborted with <ESC>.
2	USSD terminated by network.
4	operation not supported
5	network time out

Notes

- When a USSD string is sent via ATD, a "AT+CUSD=1" is executed implicitly.
- It is recommended to finalize or escape a pending USSD user interaction before further actions are done to prevent blocking situations.

10. Internet Service Commands

TC65i has an embedded TCP/IP stack that is driven by AT commands and enables the host application to easily access the Internet. The advantage of this solution is that it eliminates the need for the application manufacturer to implement own TCP/IP and PPP stacks, thus minimizing cost and time to integrate Internet connectivity into a new or existing host application. This chapter is a reference guide to all the AT commands and responses defined for use with the TCP/IP stack.

Access is provided to the following Internet Services:

1. Socket Client and Server for TCP, Client for UDP
2. FTP Client
3. HTTP Client
4. SMTP Client
5. POP3 Client

Two design strategies for using Internet Service AT commands - URC mode or polling mode:
The TC65i offers two modes of controlling an Internet session opened with AT^SISO. To select the mode that best suits the preferences of your application design use the AT^SCFG command, parameter "Tcp/WithURCs" (refer to <tcpWithUrc>).

- URC mode (delivery default):
  The progress of an Internet session is URC driven. The URCs notify the host whether data can be sent or received, whether data transfer has completed, whether the service can be closed or whether an error has occurred. This mechanism eliminates the need to poll the service until the necessary progress information is received.
  To enable the URC mode select: AT^SCFG="Tcp/WithURCs",on.
- Polling mode:
  In polling mode, the presentation of URCs related to the Internet Services is disabled. The host is responsible to retrieve all the status information needed for controlling the Internet session. This is done by polling, where the host application keeps sending the commands AT^SISR, AT^SISW, AT^SISI.
  To enable the polling mode select: AT^SCFG="Tcp/WithURCs",off.
  The disabled URCs are the following: "^SISR" URC, "^SISW" URC and "^SIS" URC for parameter <urcCause>=0 (Internet service events), but not for <urcCause>=1 or 2 (needed for Socket listener and always enabled).

Step-by-step overview of how to configure and use TCP/IP communications with TC65i:

- Select URC mode or polling mode as described above.
- First of all, create a CSD or GPRS connection profile with AT^SICS. The connection profile is a set of basic parameters which determines the type of connection to use for an Internet service. The connection type is also referred to as bearer. Up to 6 connection profiles can be defined, each identified by the <conProfileId>.
- Secondly, use AT^SISS to create a service profile based on one of the connection profiles. Up to 10 service profiles can be defined, each identified by the <srvProfileId>. The service profile specifies the type of Internet service to use, i.e. Socket, FTP, HTTP, or one of the email services SMTP or POP3. To assign a connection profile to a service profile, the <conProfileId> of AT^SICS must be entered as "conId" value of the AT^SISS parameter <srvParmTag>.
  This offers great flexibility to combine connection profiles and service profiles. For example, you may have one connection profile (CSD or GPRS) specified with AT^SICS which can be associated with an SMTP service profile for sending emails and a POP3 service profile for retrieving emails.
- Once the connection profile and the service profile are created, an Internet session can be opened by entering the AT^SISO write command and the desired <srvProfileId>.
  In URC mode, the "^SISR" or "^SISW" URC indicates whether the service is ready to receive or send data. This means, that the AT^SISR or AT^SISW command shall be entered after the URC was received. If an error occurs the "^SIS" URC is delivered instead.
  In polling mode, you can enter the AT^SISR or AT^SISW command straight after AT^SISO though you may

need to do so several times until the service confirms that data can be sent or received.

- The first parameter of the AT^SISR or AT^SISW commands is always the <srvProfileId>, the second parameter is the number of bytes which the host either wants to send to or is able to receive from the module. The way the module handles the data transfer follows the rules of the ordinary socket interface and is aware that a host may be limited by its input buffer size. The maximum data size supported by TC65i is 1500 bytes in both directions (read or write). To send or receive more than 1500 bytes, the read or write action shall be repeated until the data transfer has completed. Each read or write action requires that the command response (of AT^SISR or AT^SISW) confirms that the service is ready to send or receive data.
  To end an upload data stream set the <eodFlag> in the last AT^SISW command.
- The AT^SISI command shall be used to monitor the progress of the session. The command reports the service state of the used service profile and indicates the number of bytes received, the number of bytes sent and, in the case of sending, the number of bytes acknowledged or unacknowledged at TCP layer.
- If an error occurs during a session you can enter the AT^SISE command and the <srvProfileId> to identify the reason. This is especially important in polling mode.
- Finally, to end a session, enter the AT^SISC write command and the <srvProfileId>.

Additional AT commands designed for controlling and monitoring the connection profiles (bearers):

- The AT^SICI command can be used any time to query the current status of one or all connection profile(s).
- The AT^SICO command opens a connection and keeps it open until closed with AT^SICC or disconnected by the network.
- The AT^SICC command closes a connection set up with AT^SICO.
- The AT^SISX command sends ICMP (Interntet Control Message Protocol) Echo Requests to a target IP address or host name to verify the TCP/IP network connection.

Maximum number of profiles defined / used:

- Up to 6 connection profiles can be created (with AT^SICS).
- Up to 10 service profiles can be created (with AT^SISS), but the number of parallel profiles of the same service type is limited as listed below. If the maximum number of a service profile type is already defined, any attempt to set up another profile for the same type will be denied with "+CME ERROR: operation of service temporary not allowed".
  - Maximum 3 HTTP profiles
  - Maximum 6 socket profiles: Only 2 instances can be opened for listener, meaning that if 2 listeners are established another 4 instances can be opened for clients. Also, the socket service can accept an incoming connection only when at least one service profile is still free (not yet created with AT^SISS), otherwise the incoming connection will be rejected from the listener. If there is no listener established all 6 socket profiles can be configured as client.
  - 1 FTP profile
  - 1 POP3 profile
  - 1 SMTP profile
- The TCP/IP stack of TC65i supports using several service profiles at the same time, provided all of them are running on the same connection profile (bearer). For example, it is possible to download files from an FTP server, while sending and receiving emails at the same time.

Using Internet Service AT commands on several interfaces (ASC0, ASC1, USB or Multiplex mode on ASC0 or USB):

- A connection profile can be created on one interface and then viewed or changed on all other interfaces.
- A service profile can be used only on one interface at a time:
  - Service profiles can only be opened on the interface where they have been defined with AT^SISS.
  - Accordingly, on each interface the read commands AT^SISO? and AT^SISI? deliver full status information for the service profiles configured / opened on this interface, while service profiles related to other interfaces are only listed by <srvProfileId> and service type name (= <srvParmTag> value "srvType") without any status parameters.

- Changes to a service profile are allowed only on the same interface where it was created, trying to change it on another interface is denied with "+CME ERROR: invalid index". If queried with the read command AT^SISS? the entire profile is returned on the interface where the service profile was created, while on all other interfaces only the service type of the profile is stated.
- To free a service profile for use on another interface, use the AT^SISS command and select service type = "none". This action deletes the entire profile and restores all parameters of the profile to their initial power-up state (all values are empty). For example, to remove the service profile 3, set AT^SISS=3,srvType,none. After this, a new profile 3 can be created on any other interface.

Address notation
Server addresses must be provided as IP addresses in standard dot-format (e.g. "192.168.1.2") or as server address names resolvable by a DNS server (e.g. "smtp.myserver.de" or "pop3.myserver.de").

Timeouts
Timeouts are not part of the Internet AT command functionality implemented in TC65i and, if desired, are the responsibility of the host application. It is recommended that the host application validates URCs and AT command responses and reacts adequately, for example by sending a close message or starting a timer.

Socket service used with UDP protocol
The significant differences between the TCP and UDP protocols imply that UDP sometimes requires particular procedures or even specific parameters. Details on how to handle UDP services can be found in extra notes or are included in the general parameter descriptions.
The TC65i offers two kinds of Socket service with UDP protocol. One is referred to as UDP client intended for connections to a given remote host. In this case the IP address and the UDP port of the remote host are set as a fixed parameter in the service profile. The other type is referred to as UDP endpoint where IP address and UDP port of the remote hosts are handled in each read (AT^SISR) and write (AT^SISW) request. This enables the host application to communicate with different remote hosts.

Using the DCD line to detect the connection status of Internet services
With AT&C you can configure the DCD line of the used serial interface to indicate whether an Internet service is active. For Socket, HTTP, SMTP and POP3 the states "Up" or "Connecting" are indicated, for FTP only the state "Up".

10.1 AT^SICS Internet Connection Setup Profile

AT^SICS serves to create and edit Internet connection profiles. A connection profile can be assigned to one or more service profiles defined with AT^SISS, and thus, determines which type of connection is to be established when opening a service profile with AT^SISO.

The AT^SICS read command requests the current settings of all Internet connection profiles. One line is issued for every possible parameter of a given <conParmTag> "conType" value.

The AT^SICS write command specifies all parameters of a connection profile identified by <conProfileId>. At first the type of Internet connection needs to be selected via <conParmTag> value "conType". This determines the applicability of all other <conParmTag> values related to this "conType" and automatically sets their defaults. An exception is the <conParmValue-alphabet> which can be set before or after selecting "conType".

To change the settings the write command needs to be executed for each single <conParmTag>. All profile parameters set with AT^SICS are volatile.

Table 10.1: Applicability of AT^SICS <conParmTag> values

<conParmTag> value	CSD	GPRS0
"conType"	mandatory	mandatory
"user"	optional	optional
"passwd"	optional	optional
"apn"	ø	mandatory
"inactTO"	optional	optional
"calledNum"	mandatory	ø
"dataRate"	mandatory	ø
"dataType"	mandatory	ø
"authMode"	mandatory	optional
"fnur"	optional	optional
"dns1"	optional	optional
"dns2"	optional	optional
"alphabet"	optional	optional

Syntax

Test Command

```
AT^SICS=?
```

Response(s)

```
OK
```

Read Command

```
AT^SICS?
```

Response(s)

```
^SICS: <conProfileId>, <conParmTag>, <conParmValue>
OK
```

Write Command
AT^SICS=<conProfileId>, <conParmTag>, <conParmValue>
Response(s)
OK ERROR +CME ERROR: <err>

PIN	ASC0	ASC1	USB	MUX1	MUX2	MUX3	Charge	✈	Last
-	+	+	+	+	+	+	-	+	-

Parameter Description

<conProfileId>(num)

0...5	Internet connection profile identifier. The <conProfileId> identifies all parameters of a connection profile, and, when a service profile is created with AT^SISS the <conProfileId> needs to be set as "conId" value of the AT^SISS parameter <srvParmTag>.

<conParmTag>(str)

Internet connection parameter.

“conType“	Type of Internet connection. For supported values of <conParmValue> refer to <conParmValue-conType>.
“alphabet“	Selects the character set for input and output of string parameters within a profile. The selected value is bound to the specific profile. This means that different profiles may use different alphabets. Unlike other parameters the alphabet can be changed no matter whether the <conParmTag> value "conType" has been set. For supported values of <conParmValue> refer to <conParmValue-alphabet>.
“user“	User name string: maximum 32 characters (where "" is default).
“passwd“	Password string: maximum 32 characters (where ***** is default). If <conParmValue-authMode> is "MsChapV1" then the maximum password length is 16 characters.
“apn“	Access point name string value: maximum 100 characters (where "" is default).
“inactTO“	Inactivity timeout value in seconds: 0 ... 2^{16}-1, default = 20 Number of seconds the bearer remains open although the service no longer needs the bearer connection. Do not set the timeout value below 3 sec. This may result in problems when using the <eodFlag> (set in the last AT^SISW command to terminate an upload data stream). The value -1 indicates that, after opening the bearer with AT^SICO, the inactivity timeout is currently disabled. Closing the bearer with AT^SICC restores the previously set "inactTO" value of the concerned connection profile.
“calledNum“	Called BCD number.
“dataRate“	Data rate. For supported values of <conParmValue> refer to <conParmValue-dataRate>.
“dataType“	Data call type. For supported values of <conParmValue> refer to <conParmValue-dataType>.

“authMode“	Authentication mode. For supported values of <conParmValue> refer to <conParmValue-authMode>.
“fnur“	Fixed Network User Rate. For supported values of <conParmValue> refer to <conParmValue-fnur>.
“dns1“	Primary DNS server address (IP address in dotted-four-byte format). This value determines whether to use the DNS server addresses dynamically assigned by the network or a specific DNS server address given by the user. "dns1" = "0.0.0.0" (default) means that the CSD or GPRS connection profile uses dynamic DNS assignment. Any other address means that the Primary DNS is manually set. The default value applies automatically if no other address is set. Note that the AT^SICS read command only returns a manually configured IP address, while the value "0.0.0.0" is not indicated at all, no matter whether assumed by default or explicitly specified. See also note below.
“dns2“	Secondary DNS server address (IP address in dotted-four-byte format). If "dns1" = "0.0.0.0" this setting will be ignored. Otherwise this value can be used to manually configure an alternate server for the DNS1. If "dns1" is not equal "0.0.0.0" and no "dns2" address is given, then "dns2"="0.0.0.0" will be assumed automatically. The AT^SICS read command only returns a manually configured IP address, while the value "0.0.0.0" is not indicated at all, no matter whether assumed by default or explicitly specified.

<conParmValue>(str)

Parameter value; type and supported content depend on related <conParmTag>.

<conParmValue-conType>(str)

Supported connection type values in <conParmValue> for <conParmTag> value "conType".

“CSD“	Circuit-switched data call.
“GPRS0“	GPRS connection. Settings of GPRS related commands are not used, e.g. AT+CGDCONT. When a service based on a GPRS connection profile is started after entering AT^SISO TC65i automatically tries to attach to the GPRS. Yet, the only exception is AT+CGATT which can be used any time to detach from the GPRS and thus disconnect the bearer opened with AT^SISO.
“none“	Clears the connection profile.

<conParmValue-alphabet>(str)

Character set selectable with <conParmValue> for <conParmTag> value "alphabet".

[“0“]	Character set determined with AT+CSCS applies.
“1“	International Reference Alphabet (IRA, seven bit ASCII) applies.

<conParmValue-dataRate>(str)

Supported data rate values in <conParmValue> for <conParmTag> value "dataRate".

“0“	14.4 KBaud
[“1“]	9.6 KBaud

`<conParmValue-dataType>`(str)

Supported data call type values in `<conParmValue>` for `<conParmTag>` value "dataType".

“0“	ISDN
[“1“]	Analog

`<conParmValue-authMode>`(str)

Supported authentication mode values in `<conParmValue>` for `<conParmTag>` value "authMode". Changing the `<conParmValue-authMode>` will restore the password to its default (*****).

“none“

[“PAP“]

“CHAP“

“MsChapV1“

`<conParmValue-fnur>`(num)

Fixed Network User Rate (FNUR) set with `<conParmValue>`.
This parameter is only required for 14.4 kbit/s UDI calls (Unrestricted Digital Information). Changes are recommended only if an originated CSD call fails. The choice as to which of the values to use depends on the GSM network and the location. Users should be aware that even the same operator may apply varying FNUR configurations in different regions.
See also `AT^SFNUR` command.

0	not applicable
[1]	9.6 kbit/s
2	14.4 kbit/s
3	19.2 kbit/s
4	28.8 kbit/s
5	38.4 kbit/s
6	48.0 kbit/s
7	56.7 kbit/s
8	64.0 kbit/s

Notes

- Before opening a service profile based on a connection profile recently used, check with `AT^SICI` that the previous connection was properly closed. If `AT^SICI` confirms that the connection profile is in `<conState>` 0 (Down) the connection profile may be used again.
- If a GPRS network does not support or is not correctly configured for automatic DNS address assignment the TCP/IP stack cannot resolve fully qualified domain names. In this case, a warning message will be returned when trying to open an Internet service configured for automatic DNS address assignment.

10.1.1 Example: Default values of a CSD connection profile

As stated earlier, the "conType" selected with `AT^SICS` determines all other matching profile parameters related to this "conType". Once "conType" is set in a new profile, the default values of all other related parameters are assumed. To view the default settings you can use the read command `AT^SICS`?.

`at^sics=1,conType,CSD`	Select connection type CSD, identified by `<conProfileId>`1
`OK`	
`at^sics?`	Query current profiles.

^SICS: 0, "conType", ""	Profile with <conProfileId> 0 is still empty.
^SICS: 1, "conType", "CSD"	The new CSD profile just created is indicated with all related parameters set to their default.
^SICS: 1, "alphabet", "0"	Character set determined with AT+CSCS applies when string parameters are input with AT^SICS.
^SICS: 1, "user", ""	No user name set.
^SICS: 1, "passwd", "*****"	Password masked with asteriks.
^SICS: 1, "authMode", "PAP"	Authentication protocol PAP is assumed as default.
^SICS: 1, "inactTO", "0"	No inactivity timeout set.
^SICS: 1, "calledNum", ""	No destination set.
^SICS: 1, "dataRate", "1"	Data rate set to 9.6 kbaud.
^SICS: 1, "dataType", "1"	Remote device is analog, e.g. an analog modem.
^SICS: 2, "conType", ""	Profile with <conProfileId> 2 is still empty.
^SICS: 3, "conType", ""	Profile with <conProfileId> 3 is still empty.
^SICS: 4, "conType", ""	Profile with <conProfileId> 4 is still empty.
^SICS: 5, "conType", ""	Profile with <conProfileId> 5 is still empty.
OK	

10.1.2 Example: GPRS connection profile

at^sics=0,conType,GPRS0	Select connection type GPRS0.
OK	
AT^SICS=0,inactTO,"0"	Inactivitiy timeout = 0 (default).
OK	
AT^SICS=0,dns1,"193.254.160.1"	IP address of Primary DNS server.
OK	
AT^SICS=0,authMode,"PAP"	Authentication protocol PAP (default).
OK	
AT^SICS=0,passwd,t-d1	Password for GPRS services provided by the German operator T-D1.
OK	
AT^SICS=0,apn,"internet.t-d1.de"	APN to access the GPRS services provided by the German operator T-D1.
OK	

10.2 AT^SICI Internet Connection Information

The AT^SICI read command requests the current status of the Internet connection profiles currently defined with AT^SICS.

The AT^SICI write command displays the status of the specified Internet connection profile. If the connection profile is not defined yet, the command returns a "+CME ERROR" response.

Syntax

Test Command

```
AT^SICI=?
```

Response(s)

```
[^SICI:(list of defined <conProfileId>s)]
OK
```

Read Command

```
AT^SICI?
```

Response(s)

```
[^SICI: <conProfileId>, <conState>, <numServices>, <conAddr>]
[^SICI: ...]
OK
```

Write Command

```
AT^SICI=<conProfileId>
```

Response(s)

```
^SICI: <conProfileId>, <conState>, <numServices>, <conAddr>
OK
ERROR
+CME ERROR: <err>
```

PIN	ASC0	ASC1	USB	MUX1	MUX2	MUX3	Charge	✈	Last
-	+	+	+	+	+	+	-	+	-

Parameter Description

<conProfileId>(num)

Internet connection profile identifier as defined by AT^SICS (<conProfileId>).

0...5

<conState>(num)

State of the Internet connection profile.

0	Down - Internet connection is defined but not connected.
1	Connecting - A service has been opened and so the Internet connection is initated.
2	Up - Internet connection is established and usable by one or more services.
3	Limited Up - Internet connection is established, but temporarily no network coverage. This state applies only to GPRS profiles (it does not occur with CSD).
4	Closing - Internet connection is terminating.

`<numServices>`(num)

Number of services using this Internet connection profile.

0...9

`<conAddr>`(str)

Local IP address of the Internet connection profile (empty if no address is associated yet).

Notes

- Before opening a service profile based on a connection profile recently used, check with AT^SICI that the previous connection was properly closed. If AT^SICI confirms that the connection profile is in <conState> 0 (Down) the connection profile may be used again.
- If AT^SICI is used simultaneously on different instances (e.g. Mux channels) only one request can be handled at a time. On the other instance(s) "+CME ERROR: operation temporary not allowed" will be displayed. If so, repeat the command on this instance.
- After closing the last service which uses this connection profile, parameter value <numServices> is decreased after the expiry of the inactivity timeout "inactTO" of AT^SICS only.

10.2.1 Checking Connection Profile Status

`at^sici?`	Query the current status of the connection profile.
`^SICI: 1,2,1,"10.10.0.161"`	One connection profile has been created at <conProfileId>=1, and one service is opened using this connection profile. The Internet connection is in <conState>=2 ("Up").
`OK`	

Assume the network connection is temporarily not available. (If URC presentation mode of network registration is enabled the state is shown by the URC "+CREG: 2").

`at^sici?`	Query once again the current status of the connection profile.
`^SICI: 1,3,1,"10.10.0.161"`	Parameter <conState> has changed to state "Limited up".
`OK`	

The network connection is temporarily not available but the Internet connection is still established, so the host may decide to stop the data transfer to minimize the risk of losing data due to memory limitations.

`at^sici?`	Query once again the current status of the connection profile.
`^SICI: 1,2,1,"10.10.0.161"`	After re-establishing the network connection, <conState> reverts to state "Up".
`OK`	

Another service has been opened with AT^SISO:

`at^sici?`	Query once again the current status of the connection profile.
`^SICI: 1,2,2,"10.10.0.161"`	After opening another service, parameter <numServices> has increased.
`OK`	

After closing one service with AT^SISC:

at^sici?	Query once again the current status of the connection profile.
^SICI: 1,2,1,"10.10.0.161"	Parameter <numServices> has decreased.
OK	

After closing the last service with AT^SISC:

at^sici?	Query once again the current status of the connection profile.
^SICI: 1,2,1,"10.10.0.161"	The bearer is still open because of the inactivity timeout "inactTO" of AT^SICS.
OK	
at^sici?	Query again the current status.
^SICI: 1,0,0,"0.0.0.0"	The inactivity timeout "inactTO" of AT^SICS has expired, therefore the bearer is closed now. Parameter <numServices> has decreased.
OK	

10.3 AT^SISS Internet Service Setup Profile

AT^SISS serves to set up the necessary parameters in the Internet service profiles. Any service profile can then be used to control a data link in conjunction with AT^SISI, AT^SISO, AT^SISC, AT^SISR, AT^SISW and AT^SISE.

The AT^SISS read command requests the current settings of all Internet service profiles. One line is issued for every possible parameter of a given <srvParmTag> "srvType" value.

The AT^SISS write command specifies the parameters for a service profile identified by <srvProfileId>. At first the type of Internet service needs to be selected via <srvParmTag> value "srvType". This determines the applicability of all other <srvParmTag> values related to this "srvType" and sets their defaults. Changing the <srvParmTag> "srvType" of an existing service profile will reset all <srvParmTag> default values to suit the new "srvType". An exception is the <srvParmValue-alphabet> which can be set before or after selecting "srvType" and is not reset when "srvType" changes.

To change the settings the write command needs to be executed for each single <srvParmTag>. All profile parameters set with AT^SISS are volatile.

The list below shows which <srvParmTag> parameters apply to each Internet service and which of them are mandatory or optional.

Table 10.2: Applicability of AT^SISS <srvParmTag> values

<srvParmTag>	Mandatory or optional
Socket service	
"srvType"	mandatory
"conId"	mandatory
"alphabet"	optional
"address"	mandatory
"tcpMR"	optional
"tcpOT"	optional
FTP service	
"srvType"	mandatory
"conId"	mandatory
"alphabet"	optional
"address"	mandatory
"tcpMR"	optional
"tcpOT"	optional
HTTP service	
"srvType"	mandatory
"conId"	mandatory
"alphabet"	optional
"address"	mandatory
"user"	optional
"password"	optional
"hcContent"	optional
"hcContLen"	optional

<srvParmTag>	Mandatory or optional
"hcUserAgent"	optional
"hcMethod"	mandatory
"hcProp"	optional
"hcRedir"	optional
"hcAuth"	optional
"tcpMR"	optional
"tcpOT"	optional
SMTP service	
"srvType"	mandatory
"conId"	mandatory
"alphabet"	optional
"address"	mandatory
"user"	optional
"password"	optional
"tcpPort"	optional
"smFrom"	mandatory
"smRcpt"	mandatory
"smCC"	optional
"smSubj"	optional
"smHdr"	optional
"smAuth"	optional
"tcpMR"	optional
"tcpOT"	optional
POP3 service	
"srvType"	mandatory
"conId"	mandatory
"alphabet"	optional
"address"	mandatory
"user"	mandatory
"password"	mandatory
"tcpPort"	optional
"pCmd"	mandatory
"pNumber"	optional
"pLength"	optional
"pDelFlag"	optional
"tcpMR"	optional
"tcpOT"	optional

Syntax

Test Command

```
AT^SISS=?
```

Response(s)

```
OK
```

Read Command

```
AT^SISS?
```

Response(s)

```
^SISS: <srvProfileId>, <srvParmTag>, <srvParmValue>
OK
ERROR
+CME ERROR: <err>
```

Write Command

```
AT^SISS=<srvProfileId>, <srvParmTag>, <srvParmValue>
```

Response(s)

```
OK
ERROR
+CME ERROR: <err>
```

PIN	ASC0	ASC1	USB	MUX1	MUX2	MUX3	Charge	✈	Last
-	+	+	+	+	+	+	-	+	-

Parameter Description

<srvProfileId>(num)

Internet service profile identifier.
The <srvProfileId> is used to reference all parameters related to the same service profile. Furthermore, when using the AT commands AT^SISO, AT^SISR, AT^SISW and AT^SISC the <srvProfileId> is needed to select a specific service profile.

0...9

<srvParmTag>

Internet service profile parameter.

srvType	Type of Internet service to be configured with consecutive usage of AT^SISS. For supported values of <srvParmValue> refer to <srvParmValue-srvType>.
alphabet	Selects the character set for input and output of string parameters within a profile. The selected value is bound to the specific profile. This means that different profiles may use different alphabets. Unlike other parameters the alphabet can be changed no matter whether the <srvParmTag> value "srvType" has been set. For supported values of <srvParmValue> refer to <srvParmValue-alphabet>.
user	User name string **1.** Socket Not applicable. **2.** FTP Not applicable; set within "address" parameter. **3.** HTTP Length: 2 ... 31 User name for the HTTP authentication mechanism. Currently only HTTP

simple authentication is supported.

4. SMTP
   User name to be used for SMTP authentication (string).
   Length: 4 ... 64.
   If SMTP authentication is disabled, i.e. "smAuth" flag not set, user name parameter will be ignored.
5. POP3
   User name identifying a mailbox, i.e. mailbox name (string).
   Length: 1 ... 64.

passwd — Password string

1. Socket
   Not applicable.
2. FTP
   Not applicable; set within "address" parameter.
3. HTTP
   Length: 2 ... 31
   Password for the HTTP authentication mechanism. Currently HTTP simple authentication is supported only.
4. SMTP
   Password to be used for SMTP authentication (string).
   Length: 4 ... 64.
   If SMTP authentication is disabled, i.e. "smAuth" flag not set, password parameter will be ignored.
5. POP3
   Server/mailbox-specific password (string).
   Length: 1 ... 64.
   Used to perform authentication with a POP3 server.

conId — Internet connection profile to be used, for details refer AT^SICS.

tcpPort — TCP Port Number

1. Socket
   Not applicable; set within "address" parameter.
2. FTP
   Not applicable; set within "address" parameter.
3. HTTP
   Not applicable; set within "address" parameter.
   If parameter is omitted the service connects to HTTP default port 80.
4. SMTP
   SMTP server TCP port number (numeric)
   Length: 0 ... 2^{16}-1
   If this parameter is not set, SMTP default port number 25 is used.
5. POP3
   POP3 server TCP port number (numeric)
   Length: 0 ... 2^{16}-1
   If this parameter is not set, POP3 default port number 110 is used.

address — String value, depending on the service type either a URL in the case of Socket, FTP and HTTP or an address in the case of SMTP and POP3:

1. Socket
   - Socket type TCP client URL
     "socktcp://'host':'remote tcpPort'[;disnagle='0|1'] "
     "disnagle" is optional for disabling the TCP Nagle algorithm.
     0: Nagle algorithm is enabled (default).
     1: Nagle algorithm is disabled.
   - Socket type TCP server URL
     "socktcp://listener:'local tcpPort' "
   - Socket type UDP endpoint URL

"sockudp://:'local udpPort' "

- Socket type UDP client URL
  "sockudp://'host':'remote udpPort'[;size='byte'][;port='word']"
  Parameter "size" (optional):
  0: PDU size is variable (default).
  1 ... 1500: Fixed PDU size in bytes.
  Parameter "port" (optional):
  0: Port number will be assigned from service (default).
  1 ... 2^{16}-1: defines the local port number for the UDP client.

2. FTP
   - FTP client URL (get)
     "ftp://'user':'password'@'host':'tcpPort'/'url-path' [;type='a|i|d'] "
     Refer to "IETF-RFC 1738".
   - FTP client URL (put)
     "ftpput://'user':'password'@'host':'tcpPort'/'url-path'/'element name' [;type='a|i'][;mode='u|a|d'] "

   Used parameters:
   "host" is mandatory, all other parameters are optional.
   If "password" is set then "user" must be set as well.
   If "user" is omitted the string "anonymous" is selected for "user" and "password".
   If "password" is omitted the password request is served by an empty string.
   If "tcpPort" is omitted the service connects to the FTP default port 21.
   If "url-path" contains only the IP address a directory listing is requested.
   If "url-path" contains the IP address and has a slash '/' appended a detailed directory listing is requested.
   "type": [a)scii | i)mage | d)irectory]
   "mode": [u)nique | a)ppend | d)elete]
   "u)nique" selects the FTP Store Unique command to create a file name unique to the current directory. If the file name is assigned by the server then the "^SIS" URC will appear, indicating <urcInfoId> 2100 and the file name.
   "d)elete" clears given 'element name'.
   If "mode" is omitted "replace mode" is default setting.
3. HTTP
   HTTP client URL
   Length: 6 ... 255
   "http://'server'/'path':'tcpPort' "
   "server": FQDN or IP-address
   "path": path of file or directory
   "tcpPort": If parameter is omitted the service connects to HTTP default port 80.
   Refer to "IETF-RFC 2616".
4. SMTP SMTP server address (string).
   Length: 4 ... 256.
5. POP3 POP3 server address (string).
   Length: 4 ... 256.

hcContent

Optional parameter for HTTP method "Post".
Length: 0 ... 127
Can be used to transfer a small amount of data. The content of this string will only be sent if "hcContLen" = 0. The maximum length of "hcContent" is 127 bytes.
To transmit a larger amount of data "hcContLen" must be set to a non-zero value. In this case the "hcContent" string will be ignored, and data transmission from the client to the server is done with AT^SISW.

hcContLen	Mandatory parameter for HTTP method "Post". Length: 0 ... 2^{31}-1 The content length shall be set in the header of the HTTP "Post" request before the data part is transferred. If "hcContLen" = 0 then the data given in the "hcContent" string will be posted. If "hcContLen" > 0 then the AT^SISW command will be used to send data from the client to the server. In this case, "hcContLen" specifies the total amount of data to be sent. The data can be sent in one or several parts. For each part, the transmission is triggered by the URC "^SISW: x, 1", then the AT^SISW write command can be executed. After the exact number of bytes are transferred via the serial interface, the HTTP client will go from service state "Up" to service state "Closing" (see parameters <srvState> and <srvState> for detail). Finally, the URC "^SISW: x, 2" indicates that all data have been transferred and the service can be closed with AT^SISC.
hcUsrAgent	The user agent string must be set by the application to identify the mobile. Usually operation system and software version info is set with this browser identifier. Length: 0 ... 63
hcMethod	HTTP method specification: 0=GET, 1=POST, 2=HEAD.
hcProp	Parameter for several HTTP settings. Length: 0 ... 127 The general format is 'key': <space> 'value' "\0d\0a". Multiple settings can be given separated by "\0d\0a" sequences within the string. Possible 'key' values are defined at HTTP/1.1 Standard RFC 2616.
hcRedir	This flag controls the redirection mechanism of the TC65i acting as HTTP client (numeric). If "hcRedir" = 0: No redirection. If "hcRedir" = 1: The client automatically sends a new HTTP request if the server answers with a redirect code (range 30x). Default is 1.
hcAuth	If set ("hcAuth" = 1) this flag determines that the HTTP client will automatically answer on authentication requests from the server with the current "passwd" and "user" parameter settings. If these parameters are not specified the TC65i will terminate the HTTP connection and send an indication to the TA. Default is 1.
smFrom	Email sender address, i.e. "MAIL FROM" address (string). Length: 6 ... 256 A valid address parameter consists of local part and domain name delimited by a '@' character, e.g. "john.smith@somedomain.de".
smRcpt	Recipient address of the email, i.e. "RCPT TO" address (string). Length: 6 ... 256 If multiple recipient addresses are to be supplied the comma character is used as delimiter to separate individual address values, e.g. "john.smith@somedomain.de,tom.meier@somedomain.de". Some mail servers do not accept recipient addresses without brackets <>. It is recommended to use the "RCPT TO" variable with brackets.
smCC	CC recipient address of the email (string). Length: 6 ... 256 If multiple CC recipient addresses are to be supplied the comma character is used as delimiter to separate individual address values, e.g. "john.smith@somedomain.de,tom.meier@somedomain.de".
smSubj	Subject content of the email (string). Length: 0 ... 256 If no subject is supplied the email will be sent with an empty subject.

smHdr	This parameter, if set, will be appended at the end of the email header section (string). Length: 0... 256 Hence, it serves as a generic header field parameter which allows the user to provide any email header field. It is the user's responsibility to provide correct header fields! String of max. 256 characters. Example for multipart MIME messages: *"Content-Type: multipart/mixed"*.
smAuth	SMTP authentication control flag (numeric). If disabled (<srvParmValue> "0" by default), TC65i performs action without SMTP authentication. If enabled (<srvParmValue> "1") authentication procedure with the SMTP server will be performed by means of supported authentication methods, using values of "user" and "passwd" parameters. If TC65i and SMTP server are not able to negotiate an authentication mechanism supported by both parties, the TC65i continues action without authentication. TC65i supports SMTP authentication.
pCmd	POP3 user command to be executed by the POP3 service (numeric). For supported values of <srvParmValue> refer to <srvParmValue-pCmd>.
pNumber	Optional message number argument used by the POP3 commands List ("2"), Retrieve ("3") and Delete ("4"). For POP3 commands see <srvParmTag> value "pCmd". Length: 0 ... 2^{31}-1 If no specific value is set in the service profile, the value "0" is assumed by default, i.e. "pNumber" is disabled.
pLength	Maximum message length (string, optional) Length: 0 ... 2^{31}-1 "pLength" can be used to specify the length of the message(s) to be retrieved from or deleted on the POP3 server. If no specific value is set in the service profile, the default value "0" is assumed, which means that there is no limit on the message size. A warning will be issued inthe following cases: • If "pNumber" > 0 and a specific message to be retrieved from / deleted on the server is longer than "pLength". • If "pNumber" = 0 and all messages to be retrieved from / deleted on the server are longer than "pLength". No warning will be issued in the following cases: • If there are no messages at all on the server. • If the server has message(s) below *and* above the "pLength" specified. In this case, the message(s) within the range of "pLength" can be successfully retrieved or deleted, but the message(s) above "pLength" remain on the server without any further notification given to the user. • Therefore, after retrieving / deleting messages, it is recommended to check the message status on the server. This can be done by adding a further POP3 service profile using the POP3 user command List ("2").
pDelFlag	Flag to be used with the POP3 user command Retrieve ("3"). Specifies whether or not to delete retrieved emails on the server (optional). For supported values of <srvParmValue> refer to <srvParmValue-pDelFlag>.
tcpMR	Parameter can be used to overwrite the global AT^SCFG parameter "Tcp/MaxRetransmissions" <tcpMr> for a specific Internet Service connection profile. If the parameter is not specified the value specified with AT^SCFG will be used. Supported values <srvParmValue> for this parameter are the same as described for <tcpMr>. Setting is not relevant for Internet Service "Socket" with type "UDP".

tcpOT	Parameter can be used to overwrite the global AT^SCFG parameter "Tcp/OverallTimeout" <tcpOt> for a specific Internet Service connection profile. If the parameter is not specified the value specified with AT^SCFG will be used. Supported values <srvParmValue> for this parameter are the same as described for <tcpOt>. Setting is not relevant for Internet Service "Socket" with type "UDP".

<srvParmValue>(str)

Parameter value; type and supported content depend on related <srvParmTag>.

<srvParmValue-srvType>(str)

Supported Internet service type values in <srvParmValue> for <srvParmTag> value "srvType".
Before changing the "srvType" of an existing service profile be sure that the profile is closed. To verify the connection state of the service profile enter the read command AT^SISI. Only when <srvState>=2 is returned for this specific service profile you can change its service type.

“Socket“	TC65i acting as client or server (listener) for TCP or UDP. If TC65i is TCP listener at least two service profiles are required. The first socket profile must be configured as listener. The second service profile will be dynamically assigned when a socket connection request from a remote client is incoming. For this purpose, one service profile must be left free (= not configured with AT^SISS). An incoming socket connection request will be indicated by the "^SIS" URC, with the next free <srvProfileId> shown inside the URC as parameter <urcInfoId>. The connection request can be accepted or rejected by using the commands AT^SISO or AT^SISC and the ID retrieved from the "^SIS".
“Ftp“	TC65i acting as FTP client.
“Http“	TC65i acting as HTTP client.
“Smtp“	TC65i acting as SMTP client.
“Pop3“	TC65i acting as POP3 client.
“none“	Reset Internet service profile settings. Operation is not allowed if profile is in use, i.e. it was activated via AT^SISO.

<srvParmValue-alphabet>(str)

Supported string parameter character set selections in <srvParmValue> for <srvParmTag> value "alphabet".

[“0“]	Applicable character set is determined by current setting of AT+CSCS.
“1“	International Reference Alphabet (IRA, seven bit ASCII).

<srvParmValue-pCmd>(num)

Supported POP3 user command values in <srvParmValue> for <srvParmTag> value "pCmd".

1	Status command. This command retrieves the "drop listing" of a POP3 server. A "drop listing" consists of a single line containing the number of messages in the maildrop list followed by the total size of the maildrop list in bytes. Each drop listing will be finished by a so-called "dotline", i.e. a new line with just a single dot.
2	List command. If <srvParmTag> value "pNumber" is set to a non-zero value the "List" command returns the "scan listing", consisting of a single line which contains the message number and the message size in bytes if the specified message exists in the maildrop list on the POP3 server. If no such message exists on the server than the POP3 service issues an error response to the user. If <srvParmTag> value "pNumber" is zero the "List" command returns a multiline "scan listing". For each message on the maildrop list of the server the

	POP3 service returns a line containing the message number and its size in bytes. A final "dotline" will be printed at the end of the "scan listing". If there are no messages on the maildrop list of the server, the POP3 service returns a positive response, i.e. it doesn't issue an error response, but the "scan listing" will be empty. In either case, each scan listing will be finished by a so-called "dotline", i.e. a new line with just a single dot.
3	Retrieve command. If <srvParmTag> value "pNumber" is set to a non-zero value this command retrieves the related message from the POP3 server's maildrop list. If no such message exists on the server the POP3 service issues an error response to the user. It depends on the parameter "pDelFlag" if the message will be deleted from the POP3 server upon successful retrieval. If <srvParmTag> value "pNumber" is zero the "Retrieve" command returns all messages pending in the POP3 server's maildrop. If there are no messages on the maildrop list of the server the POP3 service returns with a positive response, i.e. it doesn't issue an error response, but the returned list will be empty. Each email will be finished by a so-called "dotline", i.e. a new line with just a single dot.
4	Delete command If <srvParmTag> value "pNumber" is set to a non-zero value the command deletes the related message from the POP3 server's maildrop list. In fact, the message is marked as deleted on the server and will be deleted permanently if the POP3 service command executes successfully. In case an error has occurred, e.g. network loss, the message will not be deleted on the server even though the POP3 service command has been finished. If <srvParmTag> value "pNumber" is zero the "Delete" command deletes all messages from the POP3 server's maildrop list. In fact, the messages are marked as deleted on the server and will be deleted permanently if the POP3 service command executes successfully. In case an error has occurred, the messages will not be deleted on the server even though the POP3 service command has been finished.

<srvParmValue-pDelFlag>(num)

Supported flag values in <srvParmValue> for <srvParmTag> value "pDelFlag". Only applicable if the profile contains the POP3 user command Retrieve ("3").

[0]	Messages will not be deleted on the server.
1	Delete messages on the server which have been retrieved successfully.

Notes

- String parameters are truncated if greater than the maximum length specified above.
- If AT^SISS is used simultaneously on different instances (e.g. Mux channels) only one request can be handled at a time. On the other instance(s) "+CME ERROR: operation temporary not allowed" will be displayed. If so, repeat the command on this instance.

10.4 AT^SISI Internet Service Information

AT^SISI serves to monitor the status of Internet service profiles defined with AT^SISS.

The AT^SISI read command requests the current status of all defined Internet service profiles.

The AT^SISI write command requests the status of the specified Internet service profile. If the specified service profile is not defined yet, "+CME ERROR" is returned.

Syntax

Test Command

```
AT^SISI=?
```

Response(s)

```
[^SISI:(list of defined <srvProfileId>s)]
OK
```

Read Command

```
AT^SISI?
```

Response(s)

If response is related to service profile(s) created / opened on this interface:

```
[^SISI: <srvProfileId>, <srvState>, <rxCount>, <txCount>, <ackData>, <unackData>]
[^SISI: ...]
```

If response is related to service profile(s) created / opened on other interface(s):

```
[^SISI: <srvProfileId>, <srvParmTag>value "srvType"]
[^SISI: ...]
OK
ERROR
```

Write Command

```
AT^SISI=<srvProfileId>
```

Response(s)

```
^SISI: <srvProfileId>, <srvState>, <rxCount>, <txCount>, <ackData>, <unackData>
OK
ERROR
+CME ERROR: <err>
```

PIN	ASC0	ASC1	USB	MUX1	MUX2	MUX3	Charge	✈	Last
-	+	+	+	+	+	+	-	+	-

Parameter Description

<srvProfileId>(num)

Internet service profile identifier as defined by AT^SISS (<srvProfileId>).

0...9

<srvState>(num)

Internet service state (for details see AT^SISO parameter <srvState>).

2	Allocated
3	Connecting
4	Up
5	Closing
6	Down

<rxCount>(num)

Number of bytes received via AT^SISR since last successful AT^SISO write command.
This is the same value as displayed by the AT^SISO read command with the parameter <rxCount>.

<txCount>(num)

Number of bytes sent via AT^SISW since last successful AT^SISO write command.
This is the same value as displayed by the AT^SISO read command with the parameter <txCount>.

<ackData>(num)

Number of data bytes already sent and acknowledged at TCP layer. Value 0 indicates that no sent data is acknowledged yet.
Parameter is not applicable to HTTP, POP3, SMTP and Socket with UDP. For these services the counter is always set to 0.

<unackData>(num)

Number of data bytes already sent but not yet acknowledged at TCP layer. A value 0 indicates that all sent data is already acknowledged.
This is the same value as displayed in the response of the AT^SISW write command with the parameter <unackData>.
Parameter is not applicable to HTTP, POP3, SMTP and Socket with UDP. For these services the counter is always set to 0.

Note

- If a service is in state "Down" the responses for <rxCount>, <txCount>, <ackData> and <unackData> are the last known values for the service in the states "Connecting", "Up" and "Closing".

10.5 AT^SISO Internet Service Open

The AT^SISO write command starts the Internet session configured by the service profile. All further steps needed to control the session depend on whether you are using URC mode or polling mode. The AT^SISO read command returns the current status of all services.

URC mode:
If the service opens successfully, the URCs "^SISW" and "^SISR" will trigger the action to follow, either writing data with AT^SISW or reading data with AT^SISR. To terminate an upload data stream set the <eodFlag> within the last AT^SISW command. If the URCs notify that a data transfer has been successful ("^SISR: x, 2" or "^SISW: x, 2"), the service can be closed with AT^SISC. If a special event occurs, e.g. an error or a warning, after opening or while using a service then the URC type "^SIS" will be delivered.

Polling mode:
After opening the service, all progress information needed to control the session shall be explicitly requested by the host application. The particular sequence of AT commands varies depending on the service used. The following list summarizes, by way of an example, the steps normally involved in managing an upload or download job.

- Upload (Socket, FTP, HTTP, SMTP):
  - Enter the AT^SISO command, e.g. AT^SISO=9.
  - Enter AT^SISW, specify <reqWriteLength>, e.g. AT^SISW=9,20. Check resulting response for <cnfWriteLength>. Optionally, check error with AT^SISE, e.g. AT^SISE=9. If necessary, repeat the sequence several times.
  - Enter last AT^SISW command and enable <eodFlag>, e.g. AT^SISW=9,0,1.
    If Socket service: Query available data with AT^SISR, e.g. AT^SISR=9,1430.
  - Check service state with AT^SISI, e.g. AT^SISI=9, if necessary several times until <srvState>=6 ("Down").
  - Check error with AT^SISE, e.g. AT^SISE=9.
  - Close service with AT^SISC, e.g. AT^SISC=9.
- Download (Socket, FTP, HTTP, POP3):
  - Enter the AT^SISO command, e.g. AT^SISO=9.
  - Enter AT^SISR, specify <reqReadLength>, e.g. AT^SISR=9,1000. Check resulting response for <cnfReadLength>. If necessary, repeat the sequence several times until <cnfReadLength>= -2 (end of data) or ERROR.
  - Check error with AT^SISE, e.g. AT^SISE=9.
  - Close service with AT^SISC, e.g. AT^SISC=9.
- Socket service (upload and download possible in one session):
  - Recommended: Set AT+CMEE=2 to enable extended error text.
  - Enter the AT^SISO command, e.g. AT^SISO=9.
  - Enter AT^SISR or AT^SISW, specifying <reqReadLength> or <reqWriteLength>, e.g. AT^SISR=9,20 or AT^SISW=9,20. Check resulting response for <cnfReadLength> or <cnfWriteLength>. If necessary, repeat the sequence several times.
  - Check error with AT^SISE, e.g. AT^SISE=9.
  - If write action: Enter last AT^SISW command and enable <eodFlag>, e.g. AT^SISW=9,0,1.
    If Socket service: Query available data with AT^SISR, e.g. AT^SISR=9,1430.
  - Close service with AT^SISC, e.g. AT^SISC=9.

Syntax

Test Command
AT^SISO=?
Response(s)
OK

Read Command

AT^SISO?

Response(s)

^SISO: <srvProfileId>, <srvParmTag>value "srvType" [, <srvState>, <socketState>, <rxCount>, <txCount>, <locAddr>, <remAddr>]
[^SISO: ...]
OK

Write Command

AT^SISO=<srvProfileId>

Response(s)

OK
ERROR
+CME ERROR: <err>

PIN	ASC0	ASC1	USB	MUX1	MUX2	MUX3	Charge	✈	Last
±	+	+	+	+	+	+	-	-	-

Parameter Description

<srvProfileId>(num)

<srvProfileId> 0 ... 9 specified with AT^SISS.

<srvState>(num)

Internet service state.
Please note, that the state of an Internet service may influence the state of the serial DCD line. For details see description of value 2 for parameter <value> of command AT&C.

2	Allocated Service profile resources are allocated, i.e. at least the service type has been set (parameter <srvParmTag>, value "srvType" of AT^SISS). The service is not opened, but ready for configuration.
3	Connecting State after opening a service with AT^SISO where the connection is being established. If connection setup is successful the service proceeds to the state "4" (Up) and one of the URCs "^SISW" and "^SISR" may follow. If connection setup is not successful, the "^SIS" URC may appear and the service enters <srvState> 6 (Down). In the case of FTP, <srvState>=3 means that the command channel is being established. If the service profile is configured as Socket listener, then the listener always stays at <srvState>=3 and <socketState>=3 (LISTENER), while the <srvState> and <socketState> of the dynamically assigned service profile may change. See examples in Section 10.5.1.
4	Up The service performs its purpose. The data transfer process is the major function at this state. FTP: Data channel is up. SMTP: The SMTP service will not enter <srvState>=4 until the host has written the first data packet with AT^SISW.
5	Closing Internet Service is closing the network connection. FTP: Command channel is released.

6	Down This state is entered if - the service has successfully finished its session (see note on Socket), - the remote peer has reset the connection or - the IP connection has been closed because of an error (see note below on service or network errors). If a service in this state be sure to close it with AT^SISC before reopening it.

<socketState>(num)

Socket state identifier.

0	Same as value "1", but applicable only if service profile is POP3.
1	Socket not assigned, i.e. no TCP/UDP connection active.
2	Socket assigned as CLIENT.
3	Socket assigned as LISTENER.
4	Socket assigned as SERVER.

<rxCount>(num)

Number of bytes received via AT^SISR since last successful AT^SISO write command.

<txCount>(num)

Number of bytes sent via AT^SISW since last successful AT^SISO write command.

<locAddr>(str)

Recently used local IP address in dotted-four-byte format and TCP port, separated by colon, e.g. "192.60.10.10:80".

<remAddr>(str)

Remote IP address in dotted-four-byte format and TCP port, separated by colon, e.g. "192.60.10.10:80".

Notes

- If the bearer cannot be established and AT^SISO returns an error there might be a general GSM/GPRS problem. To identify the reason you can take advantage of the AT+CEER command. Using AT+CEER is especially recommended when the <infoID> parameter of the AT^SISE command equals 0.
- If a service or network error occurs during an IP session and the "^SIS" URC or the AT^SISE command display an error message, the service enters <srvState>=5 and then 6, i.e. the IP connection is closed. In this case, the service still allows reading the data stored in the buffer, but writing data is denied. After reading, close the service and open it again.
- As in polling mode no error URCs are available you are advised to integrate the commands AT^SISI and AT^SISE into the command sequences for upload and download jobs. So, the AT^SISO command may be followed by AT^SISI to check that the service has entered the <srvState>=4 before sending AT^SISR or AT^SISW. This helps you to detect errors even though the "^SIS" URCs are disabled. A typical example is that the service fails to be opened because the service profile contains a wrong destination address. In such a case, after opening with AT^SISO and OK response, the service quickly enters the states <srvState>=2, 4 and 6, with an error being returned no earlier than after sending the first AT^SISR or AT^SISW command. In URC mode, an error URC, such as "Host not found" would be received in this situation, but in polling mode the only way to detect the state is using AT^SISI or, alternatively, AT^SISO.
- If the user rapidly closes and opens TCP/IP connections based on the embedded TCP/IP stack the service may display the error "No buffer space available", meaning that all TCP/IP socket resources are exhausted. In the worst case, opening further TCP/IP connections is locked for up to 60 seconds.

- The Socket Listener may not work properly if the service is re-opened shortly after having closed the Socket Listener. To ensure that the service works correctly the host is required to wait at least two minutes before re-opening a Listener.

10.5.1 Example: Accepting / Rejecting Socket Connection Request from Remote Client

Host 1 configured as Socket listener with IP address 10.10.0.187 at port 65534 is receiving a connection request from the remote client 10.10.0.185 (at port 1024). The example assumes that connection and service profiles have been created as stated earlier.

Start the Socket service in listener mode, then query the IP address dynamically assigned to the Socket listener:

`at^siso=4`	Host 1 opens the Socket service.
`at^siso?`	Query the current status of all services. All service profiles are unused, except for service profile 4 which is running in listener mode, where <srvState>=3 (listening) and <socketState>=3 (LISTENER). The response also indicates the IP address dynamically assigned to the listener. The listener's access data (IP address and TCP port number) shall be passed on to the client.
`^SISO: 0, ""`	
`^SISO: 1, ""`	
`^SISO: 2, ""`	
`^SISO: 3, ""`	
`^SISO: 4, "Socket","3","3","0","0","10.10.0.187:65534","0.0.0.0:0"`	
`^SISO: 6, ""`	
`^SISO: 7, ""`	
`^SISO: 8, ""`	
`^SISO: 9, ""`	
`OK`	

Indication of incoming Socket connection request:

`^SIS: 4, 1, 0`	The URC indicates that the listener configured on service profile 4 is receiving a Socket connection request (<urcCause>=1) from the remote client. The last URC parameter <urcInfoId> represents the ID of the dynamically assigned service profile, here 0.
`at^siso?`	Query the current status of services.
`^SISO: 0, "Socket","2","4","0","0",` `"10.10.0.187:0","10.10.0.185:1024"`	Indication on host 1 that the connection request from the remote client has been dynamically assigned to service profile 0 which is set to Server mode (<socketState>=4).
`^SISO: 1, ""`	
`^SISO: 2, ""`	
`^SISO: 3, ""`	
`^SISO: 4, "Socket","3","3","0","0", "10.10.0.187:65534","0.0.0.0:0"`	
`^SISO: 6, ""`	
`^SISO: 7, ""`	
`^SISO: 8, ""`	
`^SISO: 9, ""`	
`OK`	

Host 1 accepts the Socket connection request:

`at^siso=0`	Host 1 accepts the connection request, where 0 is the ID of the dynamically assigned service profile.
`OK`	
`^SISW: 0, 1`	The URC indicates that data transmission to the remote client is possible. If the remote client has already sent some data the additional URC ^SISR: 0,1 is displayed.
`at^siso?`	Query the current status of services.
`^SISO: 0, "Socket","4","4","0","0",` `"10.10.0.187:65534","10.10.0.185:1024"`	The socket connection between host 1 and remote client is successfully established.
`^SISO: 1, ""`	
`^SISO: 2, ""`	
`^SISO: 3, ""`	
`^SISO: 4, "Socket","3","3","0","0","10.10.0.187:65534","0.0.0.0:0"`	

```
^SISO: 6, ""
^SISO: 7, ""
^SISO: 8, ""
^SISO: 9, ""
OK
```

Host 1 rejects the Socket connection request:

```
at^sisc=0
OK
at^siso?
^SISO: 0, ""
^SISO: 1, ""
^SISO: 2, ""
^SISO: 3, ""
^SISO: 4, "Socket","3","3","0","0","10.10.0.187:65534","0.0.0.0:0"
^SISO: 6, ""
^SISO: 7, ""
^SISO: 8, ""
^SISO: 9, ""
OK
```

Host 1 rejects the connection request, where 0 is the ID of the dynamically assigned service profile.

Query the current status of services.

The dynamically assigned service profile is free again. The Socket listener stays at <srvState>=3 (listening) and <socketState>=3 (LISTENER).

10.6 AT^SISC Internet Service Close

The AT^SISC write command closes the TCP/IP connection to the remote peer which was opened with AT^SISO. All resources are released, all status information parameters, e.g. <srvState>, <unackData>, <ackData>, <rxCount> and <txCount> counters, are reset. Only the initial configuration settings are preserved. The service can be restarted any time, using the same configuration or a new one.

Syntax

Test Command

```
AT^SISC=?
```

Response(s)

```
OK
```

Write Command

```
AT^SISC=<srvProfileId>
```

Response(s)

```
OK
ERROR
+CME ERROR: <err>
```

PIN	ASC0	ASC1	USB	MUX1	MUX2	MUX3	Charge	✈	Last
±	+	+	+	+	+	+	-	-	-

Parameter Description

<srvProfileId>(num)

0...9	<srvProfileId> specified with AT^SISS.

10.7 AT^SISR Internet Service Read Data

The AT^SISR command either triggers a read operation (download) or queries the number of bytes in the internal buffer.

The AT^SISR write command may return the following errors:

- "+CME ERROR: operation failed" if there is a problem on application, socket, PPP or GPRS/GSM level. The AT^SISE command and the "^SIS" URC offer additional error information.
- "+CME ERROR: operation temporary not allowed" e.g. if the service has not network resources allocated.
- "+CME ERROR: operation not allowed" e.g. if the service is not configured.

Syntax

Test Command

```
AT^SISR=?
```

Response(s)

```
OK
```

Write Command

```
AT^SISR=<srvProfileId>, <reqReadLength>
```

Response(s)

```
^SISR: <srvProfileId>, <cnfReadLength>[, <remainUdpPacketLength>[, <optServParm>]]
```

Number of data bytes are sent as specified by <cnfReadLength>. If peek operator was used no data bytes are sent.

```
OK
ERROR
+CME ERROR: <err>
```

PIN	ASC0	ASC1	USB	MUX1	MUX2	MUX3	Charge	✈	Last
±	+	+	+	+	+	+	-	-	+

Unsolicited Result Code

```
^SISR: <srvProfileId>, <urcCauseId>
```

Data availability status of the Internet service configured with AT^SISS has changed. The URC is issued when:

- data is available after opening an Internet service or
- less data was confirmed (in <cnfReadLength>) than requested (with <reqReadLength>) during the last "Read Data" operation and new data is available.

The URC is disabled in polling mode. See AT^SCFG, parameter "Tcp/WithURCs", <tcpWithUrc>.

Parameter Description

<srvProfileId>(num)

<srvProfileId> 0 ... 9 specified with AT^SISS.

<reqReadLength>(num)

0	Peek Operator: Query number of received bytes within internal buffers. The behaviour of the peek operator depends on the selected Internet service, i.e. it may not be supported by all IP Services. For "Socket" service configured for UDP the size of the next available UDP packet is returned.
1...1500	Requested number of data bytes to be read via the Internet service specified in <srvProfileId>.

<cnfReadLength>(num)	
-2	Indicates end of data. Data transfer has been finished (all data have been read) and the service can be closed with AT^SISC.
-1	Applies only to HTTP: Querying number of available bytes is not supported by the HTTP service.
0	Indicates that no further data is available at the moment.
>0	Number of available data bytes. The range is determined by <reqReadLength>: If <reqReadLength> was greater than 0, then <cnfReadLength> may be less or equal to the value requested with <reqReadLength>. If <reqReadLength> equals 0 (peek operator) the value indicated by <cnfReadLength> may be greater than 1500.

<urcCauseId>(num)	
Indicates whether or not data is available for reading with AT^SISR.	
1	Data is available and can be read by sending the AT^SISR command. The URC appears when less data was confirmed (in <cnfReadLength>) than requested (with <reqReadLength>) during the last "Read Data" operation and new data is available.
2	End of data. Data transfer has completed (all data read). The service can be closed with AT^SISC.

<remainUdpPacketLength>(num)	
Optional third parameter of the AT^SISR write command response displayed only if the Socket service uses the UDP protocol. The reception of each datagram must be completed before the next datagram can be received. This may be a problem if the buffer of the host application is limited and not designed to handle the maximum packet size of 1500 bytes. To compensate this, the host is advised to request, via <reqReadLength>, an amount less or equal its maxmimum buffer capacity and wait for the resulting AT^SISR write command response with parameter <remainUdpPacketLength>. The benefit of this approach is that the host may properly receive all parts of a UDP datagram, as after each received data part the number of remaining bytes is synchronized, until reading the datagram is finished. If the currently read datagram is smaller than the number of bytes requested by the host the <remainUdpPacketLength> parameter is omitted. Further write attempts with AT^SISR are denied as long as the <remainUdpPacketLength> is unequal 0 or is not omitted. In this case the service returns "+CME ERROR: operation of service temporary not allowed".	
0	Indicates that all bytes of the current UDP datagram are read.
1...(max. data size)-1	Indicates that the currently read UDP datagram is not yet complete. The displayed value is the remaining number of bytes. <remainUdpPacketLength> is unequal 0 until reading all parts of the current datagram is finished.

<optServParm>(str)	
Service specific parameter of the AT^SISR write command response. If the Socket service is configured as UDP endpoint this parameter returns the IP address and the UDP port of the remote host that has sent the current UDP data.	

10.7.1 Example: Socket Host Reads Small Amounts of UDP Data Packets (URC Mode)

This section applies only to the Socket service using the UDP protocol. The example shows how to read UDP packets if the buffer of the host application can handle only a few bytes. There are two datagrams available for reading.
Buffer size: 6 bytes
Datagram A = 18 bytes (content "THIS_IS_DATAGRAM_A")
Datagram B = 3 bytes (content "NEW")

^SISR: 0,1	Service profile 0 is configured for Socket service and UDP. The URC notifies host that data is available for reading.
at^sisr=0,6	The host requests to read 6 bytes.
^SISR: 0,6,12 THIS_I OK	The first 6 bytes of datagram A are confirmed and transmitted. Another 12 bytes are still available.
at^sisr=0,6	The host requests to read the next part of 6 bytes.
^SISR: 0,6,6 S_DATA OK	The next 6 bytes of datagram A are confirmed and transmitted. Another 6 bytes are still available.
at^sisr=0,6	The host requests to read the next part of 6 bytes.
^SISR: 0,6,0 GRAM_A OK	Last part of datagram A was received, no remainder is left.
at^sisr=0,6	Again, the host requests to read 6 bytes. This time, the request refers to datagram B which has only 3 bytes. As the read datagram is smaller than the size requested by the host, the response does not include the <remainUdpPacketLength>.
^SISR: 0,3 NEW OK	3 bytes are confirmed and transmitted. Datagram B was properly received.

10.8 AT^SISW Internet Service Write Data

The AT^SISW command triggers a write operation (upload) and queries the amount of data already sent, but not acknowledged at the TCP layer. The write operation may be run in binary mode, or in interactive text mode.

The AT^SISW write command may return the following errors:

- "+CME ERROR: operation failed" if there is a problem on application, socket, PPP or GPRS/GSM level. The AT^SISE command and the "^SIS" URC offer additional error information.
- "+CME ERROR: operation temporary not allowed" e.g. if the service has not network resources allocated.
- "+CME ERROR: operation not allowed" e.g. if the service is not configured.

Syntax

Test Command

```
AT^SISW=?
```

Response(s)

```
OK
```

Write Command

```
AT^SISW=<srvProfileId>, <reqWriteLength>[, <eodFlag>[, <mode>[, <optServParam>]]]
```

Response(s)

```
^SISW: <srvProfileId>, <cnfWriteLength>, <unackData>
```
Number of data bytes as specified by <cnfWriteLength>.
```
OK
ERROR
+CME ERROR: <err>
```

PIN	ASC0	ASC1	USB	MUX1	MUX2	MUX3	Charge	✈	Last
±	+	+	+	+	+	+	-	-	+

Unsolicited Result Code

```
^SISW: <srvProfileId>, <urcCauseId>
```

Data availability status of the Internet service configured with AT^SISS has changed. The URC is issued when the service is ready to accept new user data.
The URC is disabled in polling mode. See AT^SCFG, parameter "Tcp/WithURCs", <tcpWithUrc>.

Parameter Description

<srvProfileId>(num)

<srvProfileId> 0 ... 9 specified with AT^SISS.

<reqWriteLength>(num)

0...1500

Specifies the number of bytes to be sent with AT^SISW or, if set to 0, requests the amount of data already sent with AT^SISW but not yet acknowledged:

- Parameter <reqWriteLength> may be 1...1500 bytes to specify the amount of data to be sent with AT^SISW.
- If parameter <reqWriteLength> equals 0, AT^SISW does not expect any data, but a normal query is perfomed. This allows the application to explictly request, in particular at the end of an upload job, the amount of unacknowledged data at the TCP layer indicated by <unackData>.
- In interactive text mode, <reqWriteLength> must be set to any value greater than 0 (but not necessarily the precise number of bytes). If set to 0 in interactive text mode, <reqWriteLength> would be interpreted as query for unacknowledged data and, thus, prevent data transfer.

- If Socket service is selected with UDP protocol
  - <reqWriteLength>=0 can be used to send an empty UDP packet;
  - it is recommended that the size of each data packet be limited to 1472 bytes. Otherwise, it is possible that the following URC occurs: "^SIS: <id>, 0, 9, The supplied buffer was too small / large".

<eodFlag>(num)

End of data indication flag.
Parameter is ignored for HTTP, POP3, FTP download, Socket with UDP protocol.

[0]	No end of data. Other data may follow to be transmitted via the Internet service.
1	End of data is signalled to the Internet Service. Further AT^SISW write commands return an error response. However, reading data may be possible. The <eodFlag> is effective only if the <reqWriteLength> equals <cnfWriteLength>, in particular if the <reqWriteLength> equals 0. If <mode> equals 1 the <eodFlag> is effective only if the write operation has been finished with CTRL-Z.

<mode>(num)

Control how the application provides the data bytes to be sent.

[0]	Binary mode This mode allows sending a number of bytes defined with parameter <reqWriteLength>.
1	Interactive text mode This mode allows the user to type and send 8-bit ASCII characters while the service is open. Ctrl-Z terminates data input and causes the data to be transferred. Interactive text mode requires that the <reqWriteLength> is set to any value greater than 0 (though it is not necessary to specify the precise number of bytes). In this case the <cnfWriteLength> parameter indicates the maximum length of the data stream without control character CTRL-Z. In interactive text mode, the following characters are predefined as control codes: • BACKSPACE ("\x08") deletes the last given character, • CTRL-Z ("\x1a") terminates the input, • ESC ("\x1b") aborts the command. An <eodFlag> is ignored in this case. The V.25 command ATE also controls the echo mode of the interactive text mode. If echo is enabled (ATE1) all characters are echoed until <cnfWriteLength> is reached. Any attempt to input further data ends up with the warning message 4001 indicated after the data stream has been completed with CTRL-Z, nevertheless all data within the range of <cnfWriteLength> will be sent. See also Section 10.13, Internet Service URC "^SIS". ATE0 disables the echo mode generally.

<optServParam>(str)

Service specific parameter of the AT^SISW write command. If the Socket service is configured as UDP endpoint this parameter is mandatory and specifies the IP address (in dotted format) and the UDP port of the remote host. For each write request another IP address and UDP port may be given.

<cnfWriteLength>(num)

0...1500	Confirmed number of data bytes which can be transmitted via the Internet service configured in <srvProfileId>. In binary mode (see <mode>) this number may be less or equal to the value requested with <reqWriteLength>. The application has to deliver exactly the number of bytes indicated by <cnf-

WriteLength>. A 0 value means that no data can be written at this time, i.e. it serves as a flow control mechanism.
In interactive text mode, <cnfWriteLength> indicates the maximum number of bytes it can process. Characters above the indicated number are ignored.

<unackData>(num)

Number of data bytes already sent but not yet acknowledged at the TCP layer.
The value is constantly changing until the entire upload job has completed. If the value equals 0 all data sent so far is acknowledged.
In binary mode, <unackData> includes the <cnfWriteLength> value of the pending write operation. Therefore, the very first write operation of an upload job returns identical values for <cnfWriteLength> and <unackData>.
This mechanism allows the host application to easily verify whether or not the remote host has successfully received the data.
Parameter is not applicable to HTTP, POP3, SMTP and Socket with UDP protocol. For these services the counter is always set to 0.

<urcCauseId>(num)	
1	The service is ready to accept new user data.
2	Data transfer has been finished successfully and Internet service may be closed without loss of data.

Notes

- The AT^SISW write command must be terminated only with the ASCII character set with ATS3. The factory default for S3 is #13 (Carriage Return). Do not send any further characters after the S3 end-of-line identifier, until the response "^SISW" is received. This is necessary to avoid that any characters related to the AT command can be interpreted as being part of the data stream to be transferred. Also refer to Section 1.4, AT Command Syntax.
- If the Socket service is configured for use as UDP client and fixed size and the interactive text mode is active, the PDU length always equals the specified fixed length. If the input characters exceed the specified fixed length, then all surplus characters will be ignored. If the input characters are less than the specified fixed length, then the remaining range will be filled with "\0" bytes.

10.8.1 Usage of parameter <eodFlag>

Service type	
Socket	After the service accepts the end-of-data flag the service state changes to "Closing". No further user data is accepted. After releasing the TCP link the service remains in state "Down". Parameter is not applicable to Socket with UDP protocol, i.e. value is ignored.
FTP	Parameter only applicable for FTP upload session. After accepting the end-of-data flag the service state changes to "Closing" and starts to end the running FTP session. No further user data is accepted. After the FTP session is completed on FTP protocol level the service state switches to "Down". In case of successful completion the URC "^SISW: x,2" is generated.

Service type	
SMTP	SMTP service sends some "closing" commands to the SMTP server which are necessary to mark the email as successfully sent on the server. The service enters "Closing" state and remains in it until the final protocol exchange with the SMTP server has been completed. The "OK" response following AT^SISW indicates that the SMTP service has accepted the last data - IT DOES NOT indicate the successful completion of the SMTP service. Successful completion will be indicated either by the appropriate URC "^SISW:x,2" or due to the fact that the SMTP service state changes to "Down" state without any error.
HTTP / POP3	Parameter not applicable, i.e. value is ignored.

10.9 AT^SICO Internet Connection Open

The AT^SICO write command opens a connection profile (also referred to as bearer). Unlike the AT^SISO command which starts a connection profile and the service profile bound to it, AT^SICO activates only the selected connection profile. Another difference over AT^SISO is that AT^SICO disables the inactivity timeout of the selected connection profile and, therefore, sets the "inactTO" value to -1 (see also AT^SICS). To release the connection use the close command AT^SICC. Closing the bearer restores the previously set "inactTO" value of the concerned connection profile.

The AT^SICO command may be used, for example, to keep a bearer open while no service is active (i.e. while no service has been opened with AT^SISO). Also, the AT^SICO command is necessary for running the Ping command AT^SISX when no service has been opened with AT^SISO.

A connection opened with AT^SICO remains open until closed with AT^SICC or, in case of inactivity, disconnected by the network after 25 hours usually. The network initiated disconnection can be avoided by sending AT^SISX at regular intervals (Ping). The Round Trip Time (RTT) of the AT^SISX command strongly depends on the data traffic of the IP services or DUN connections used at the same time.

Please note that after sending the AT^SICO write command the AT channel is blocked until the connection is established. The command may be aborted when receiving any character during execution, e.g. "AT" or "at".

The AT^SICO read command requests the current settings of all Internet connection profiles set with AT^SISC. The output is identical with the read command response of AT^SISC. One line is issued for every possible parameter of a given <conParmTag> value.

Syntax

Test Command

```
AT^SICO=?
```

Response(s)

```
[^SICO:(list of defined <conProfileId>s)]
OK
```

Read Command

```
AT^SICO?
```

Response(s)

```
[^SICO: <conProfileId>, <conParmTag>, <conParmValue>]
[^SICO: ...]
OK
```

Write Command

```
AT^SICO=<conProfileId>
```

Response(s)

```
OK
ERROR
+CME ERROR: <err>
```

PIN	ASC0	ASC1	USB	MUX1	MUX2	MUX3	Charge	✈	Last
+	+	+	+	+	+	+	-	-	-

Parameter Description

<conProfileId>(num)

0...5	Internet connection profile identifier defined with parameter <conProfileId> of AT^SICS.

<conParmTag>(str)

Internet connection profile identifier defined with parameter <conParmTag> of AT^SICS. See parameter description of AT^SICS.

<conParmValue>(str)

Internet connection parameter set with <conParmValue> of AT^SICS. See parameter description of AT^SICS.

Note

- Be sure not to mix up the start and close commands for connection profiles and service profiles. It is allowed to use only the combinations AT^SICO / AT^SICC or AT^SISO / AT^SISC.

10.10 AT^SICC Internet Connection Close

The AT^SICC write command releases a connection opened with AT^SICO and restores the previously set inactivity timeout "inactTO" of the selected connection profile.

The command returns an error if any services are bound to this profile. Before using the AT^SICC write command be sure that all services were closed with AT^SISC.

Syntax

Test Command

```
AT^SICC=?
```

Response(s)

```
[^SICC:(list of defined <conProfileId>s)]
OK
```

Write Command

```
AT^SICC=<conProfileId>
```

Response(s)

```
OK
ERROR
+CME ERROR: <err>
```

PIN	ASC0	ASC1	USB	MUX1	MUX2	MUX3	Charge	✈	Last
+	+	+	+	+	+	+	-	-	-

Parameter Description

<conProfileId>(num)

0...5	Internet connection profile identifier defined with parameter <conProfileId> of AT^SICS.

Note

- Be sure not to mix up the start and close commands connection profiles and service profiles. It is allowed to use only the combinations AT^SICO / AT^SICC or AT^SISO / AT^SISC.

10.11 AT^SISX Internet Service Execution

The AT^SISX command sends ICMP (Internet Control Message Protocol) Echo Requests to a target IP address or host name (also referred to as Ping command).

The AT^SISX command can be used any time while a connection profile, i.e. a bearer, is active. The bearer may have been started either with AT^SICO, or if a service is in use, with AT^SISO. If issued although no bearer is active or no connection profile created at all, AT^SISX returns ERROR.

The AT^SISX write command starts the available service type <service>, i.e. the ping command. The command returns one row for every ICMP Echo Request (max. 30 lines, see parameter <request>). The last Ping response line is followed by an empty line, then another two lines appear to report a statistic calculated from the Echo Request responses. To stop the periodic ping type any character, e.g. "AT" or "at". After calling the ping command the AT channel is blocked until all ICMP requests are executed.

Sending the Ping command does not restart the inactivity timeout "inactTO" of the used connection profile (see AT^SICS), i.e. if the bearer was opened with AT^SICO the "inactTO" value remains "-1" (= inactivity timeout disabled), and if the bearer was opened with AT^SISO the "inactTO" value set with AT^SICS remains applicable. The Ping command can only be used to prevent that a network initiated inactivity timeout closes the bearer (see also description of AT^SICO).

Syntax

Test Command

AT^SISX=?

Response(s)

^SISX:<service>, (list of supported <conProfileId>s), <address>, (range of <request>), (range of <timelimit>)
OK

Write Command

AT^SISX=<service>, <conProfileId>, <address>[, <request>, <timelimit>]

Response(s)

In case of <pingInfoType>= 1: ICMP Echo Requests (1 - 30 rows)
^SISX:<service>, <pingInfoType>, <conProfileId>, <address>, <roundTripTime>
[...]

In case of <pingInfoType>= 2: Packet statistic (1 row)
^SISX:<service>, <pingInfoType>, <conProfileId>, <sent>, <received>, <lost>, <lostPercent>

In case of <pingInfoType>= 3: Time statistic (1 row)
^SISX:<service>, <pingInfoType>, <conProfileId>, <minRTT>, <maxRTT>, <meanRTT>

OK
ERROR
+CME ERROR: <err>

PIN	ASC0	ASC1	USB	MUX1	MUX2	MUX3	Charge	✈	Last
+	+	+	+	+	+	+	-	-	-

Parameter Description

`<service>`(str)

“Ping“	Service type.

`<conProfileId>`(num)

0...5	Internet connection profile identifier defined with parameter `<conProfileId>` of `AT^SICS`.

`<address>`(str)

Target host name or IP address for pinging (i.e. 192.168.1.3).

`<request>`(num)

[1]...30	Number of ping requests (ICMP Echo Requests).

`<timelimit>`(num)

200...[5000]...10000	Amount of time, in milliseconds, to wait for an Echo Response message related to a sent Echo Request message.

`<pingInfoType>`(num)

Marks the type and format of the information given in the command responses (see syntax of the `AT^SISX` write command above).

1	Ping response(s) received for the ICMP Echo Request(s). Depending on parameter `<request>` 1 - 30 rows. Address and Round Trip Time are returned for each request.
2	1-row packet statistic calculated from the ping response(s) received for `<pingInfoType>`=1.
3	1-row time statistics calculated from the ping response(s) received for `<pingInfoType>`=1.

`<roundTripTime>`(num)

Round Trip Time in milliseconds. If the Echo Response message is not received within the time specified by `<timelimit>` the value -1 is returned (e.g. when the bearer shuts down during command execution).

`<sent>`(num)

Number of sent packets.

`<received>`(num)

Number of received packets.

`<lost>`(num)

Number of lost packets.

`<lostPercent>`(num)

Lost packets in percent.

`<minRTT>`(num)

Minimum Round Trip Time in milliseconds.

<maxRTT>(num)

Maximum Round Trip Time in milliseconds.

<meanRTT>(num)

Average Round Trip Time in milliseconds.

10.11.1 Example: Ping

The following example shows a Ping output:

```
AT^SICS=0,conType,GPRS0                          Select connection type GPRS0.
OK
AT^SICS=0,apn,"GPRS02.point.de"
AT^SICO=0
OK
AT^SISX="Ping",0,192.168.1.2,4,2000
^SISX: "Ping",1,0,"192.168.1.2",1043
^SISX: "Ping",1,0,"192.168.1.2",586
^SISX: "Ping",1,0,"192.168.1.2",531
^SISX: "Ping",1,0,"192.168.1.2",415

^SISX: "Ping",2,1,4,4,0,0
^SISX: "Ping",3,1,415,1043,643
OK
```

10.12 AT^SISE Internet Service Error Report

The AT^SISE write command returns the current error status of the specified Internet service profile. If the service profile is not defined or the value is invalid "+CME ERROR" response is returned.
The error status is identical to the content of the "^SIS" URC last issued.
If a service fails the commands AT^SISR or AT^SISW will return an error response. However, if the AT^SISE command returns <infoID>=0 it is recommended to use the AT+CEER command because a general GSM/GPRS problem might be the reason.

Syntax

Test Command

```
AT^SISE=?
```

Response(s)

```
OK
```

Write Command

```
AT^SISE=<srvProfileId>
```

Response(s)

```
^SISE: <srvProfileId>, <infoID>[, <info>]
OK
ERROR
+CME ERROR: <err>
```

PIN	ASC0	ASC1	USB	MUX1	MUX2	MUX3	Charge	✈	Last
-	+	+	+	+	+	+	-	-	-

Parameter Description

<srvProfileId>(num)

Internet service profile identifier as defined by AT^SISS <srvProfileId>.

0...9

<infoID>(num)

Reason for Internet service error. This is a subset of the <urcInfoId>s which can be found in Section 10.13, Internet Service URC "^SIS".
The value 0 indicates there is no special Internet service error. In this case the application may use AT+CEER to check for general GSM/GPRS problems.

<info>(str)

Information text related to <infoID>. This is a subset of the <urcInfoText>s which can be found in Section 10.13, Internet Service URC "^SIS".

Note

- In particular cases, the AT^SISE command may deliver information and warnings. This applies the following services:
  FTP: Information 2100
  POP3: Warnings
  SMTP: Warnings
  If an error occurs the information and warning messages are overwritten by error messages.

10.13 Internet Service URC "^SIS"

This section first describes the syntax and the parameters of the "^SIS" URC. The second part consists of tables listing the information elements delivered within the "^SIS" URC and the command response of AT^SISE.

The presentation of the "^SIS" URC containing the parameter <urcCause>=0 can be disabled or enabled depending on whether polling mode or URC mode is preferred. To do so, use the AT^SCFG command, parameter "Tcp/WithURCs" (refer to <tcpWithUrc>). However, if related to <urcCause>=1 or 2, the "^SIS" URC will always be delivered regardless of the setting made with AT^SCFG.

Unsolicited Result Code

Indicates an event, an error or an information element. The same information can be obtained via AT^SISE.

^SIS: <srvProfileId>, <urcCause>[, [<urcInfoId>][, <urcInfoText>]]

The URC may appear if an event or an error occurs, for example after opening an Internet service with AT^SISO or any time during operation. The URC also indicates a request for a mobile terminated Internet service client connection, or a failure if a mobile terminated request is rejected. Furthermore, the URC may deliver an information element resulting from a specific command given in the service profile.

A list of possible causes can be found in the tables below. The tables contain the <urcInfoId> and, if applicable, a specific <urcInfoText>. If marked with *) the precise text related to a <urcInfoId> varies greatly depending on the scenario and the implementation of the remote server. In these cases, only a brief explanation of the scenario can be found in the table column "Description".

Parameter Description

<urcCause>(num)

URC cause identifier.

0	An event has occurred after opening or while using an Internet service. The event number is presented via <urcInfoId> and may be an error, a warning, an information element or a note. Optionally additional information may be supplied via <urcInfoText>.
1	Indicates that an opened Socket listener service is receiving a connection request from a remote client. The incoming socket connection is dynamically assigned to the next free Internet service profile. In this case, the parameter <urcInfoId> inside the "^SIS" URC equals the <srvProfileId> of the dynamically assigned service profile. This ID shall be used to accept the connection request with AT^SISO or to reject it with AT^SISC. The connection status may be requested by using the AT^SISI read or write command or the AT^SISO read command. Among other details, the response indicates the IP address of the remote client (parameter <remAddr>). This may be helpful to decide whether to accept or reject the request.
2	Incoming Socket service client connection has failed. The client request was rejected automatically because no free Internet service profile was available.

<urcInfoId>(num)

Information identifier related to <urcCause>. See tables below for further detail. The <urcInfoId> number ranges indicate the type of information element:
0: Service is working properly.
1 - 2000: Error, service is aborted and enters <srvState>=6 (Down).
2001 - 4000: Information related to progress of service.
4001 - 6000: Warning, but no service abort.
6001 - 8000: Notes
Additional information for Socket service: As stated above, if a Socket connection request from a remote client is received (see <urcCause>=1) the <urcInfoId> equals the <srvProfileId> of the dynamically assigned free service profile.

<urcInfoText>(str)

Information text related to <urcCause>. See tables below for further detail.

10.13.1 Information Elements Related to the Service Application

The following table lists the informatiomation elements which may be returned by all supported services within the "^SIS" URC and the command response of AT^SISE. It should be noted that TCP/IP socket problems may occur in all Internet service connections (Socket, FTP, HTTP, POP3 or SMTP).

<urcInfoId>	<urcInfoText>	Description
Information Elements Returned by the TCP/IP socket		
2	Invalid socket descriptor	Socket error
3	Bad address specified	Socket error
4	Invalid operation	Socket error
5	No free socket descriptors	Socket error
6	The operation would block	Socket error
7	A previous attempt at this operation is still ongoing	Socket error
8	Socket is not bound	Socket error
9	The supplied buffer is too small / large	Socket error
10	Flags not supported	Socket error
11	Operation not supported	Socket error
12	The address is already in use	Socket error
13	The network is unavailable	Socket error
14	An established connection was aborted (transmission time-out or protocol error)	Socket error
15	Remote host has reset the connection	Socket error
16	No buffer space available	Socket error
17	The socket is already connected	Socket error
18	For TCP/IP sockets, the socket is not connected	Socket error
19	Socket has been shut down	Socket error
20	Connection timed out	Socket error
21	Remote host has rejected the connection	Socket error
22	Remote host is unreachable	Socket error
23	An unexpected error occurred	Socket error
24	Host not found	DNS error
25	An error occurred that may be transient; a further attempt may succeed.	DNS error
26	An unrecoverable error occurred	DNS error
General Information Elements		
46	Fatal: The service has detected an unknown error	
47	*)	Indicates that the remote service has closed the connection. The host shall close the service.

<urcInfoId>	<urcInfoText>	Description
48	Remote peer has closed the connection	Remote peer has closed the connection unexpectedly, and no data are available. The host shall close the service. Note that the "^SIS" URC only indicates the <urcInfoId>, but the AT^SISE command indicates both the <urcInfoId> and the <urcInfoText>.
49	Fatal: No memory is available for service action	
50	Fatal: Service has detected an internal error	
80		Connection profile not defined.
84	PPP LCP FAILED	PPP error
85	PAP Authentication failed	PPP error
86	CHAP Authentication failed	PPP error
87	IPCP failed	PPP error
Warnings		
4001		Applies only to interactive text mode: Indicates that number of input characters is greater than <cnfWriteLength>.
General Information Elements		
6001		General progress information for connection setup.

10.13.2 Information Elements Related to FTP Service

<urcInfoId>	<urcInfoText>	Description
100	FTP Server rejects session.	
101	FTP Server rejects USER command.	
102	FTP Server rejects PASS command.	
103	FTP Server rejects PASV command or client can't detect remote IP address.	
104	FTP Server rejects requested client action.	
105	The given path segment is wrong.	
106	*)	The FTP client requests the file size from the server before starting the download. During transmission phase the client adds the bytes which are sent via serial line. After transmission is done the client compares the amount of bytes transferred via serial line and socket.
2100	FILE: <filename>	File name assigned by FTP server if mode=u is used.

10.13.3 Information Elements Related to HTTP Service

<urcInfoId>	<urcInfoText>	Description
Error URCs		
200	HTTP-ERR: Not connected - cannot send request HTTP-ERR: failed on sending request	
201	<HTTP Response Str>	Client error
202	<HTTP Response Str> HTTP-ERR: Service unavailable	Server error
203	HTTP-ERR: Redirect failed - too many redirects HTTP-ERR: Redirect failed - not allowed HTTP-ERR: Redirect failed - location missing	Max. number of allowed redirects: 6
204	HTTP-ERR: auth failed - user name or password missing HTTP-ERR: auth failed - user name or password wrong HTTP-ERR: Authority required for this URL HTTP-ERR: No access to this URL allowed	
Info URCs		
2200	HTTP Redirect to: <Host>:<Port> <Path>	
2201	HTTP Response <Response code> Example: ^SIS: 2,3,2201, "HTTP Response: HTTP/1.1 200 OK"	

10.13.4 Information Elements Related to POP3 Service

<urcInfoId>	<urcInfoText>	Description
Errors		
300	*)	Indicates that the POP3 User Command could not be executed successfully.
Warnings		
4300	*)	POP3 specific warning

10.13.5 Information Elements Related to SMTP Service

<urcInfoId>	<urcInfoText>	Description
Errors		
400	*)	Indicates that the SMTP service could not be executed successfully.
Warnings		
4400	*)	SMTP specific warning

*) Text varies depending on scenario.

10.14 Examples of how to Configure and Use Internet Service Profiles

Below you can find selective examples of how to configure and use Internet service profiles. To visualize the difference between URC mode and polling mode the operation of services (after opening with AT^SISO) is explained in separate examples for either mode.

10.14.1 Selecting URC Mode or Polling Mode

To enable or disable the presentation of URCs for the Internet services use the AT^SCFG command, type "TcpIp/WithURCs" and select "on" or "off" for parameter <tcpWithUrc>.

at^scfg=tcp/withurcs	Query the current setting.
^SCFG: "Tcp/WithURCs","on"	URC mode is enabled (delivery detault).
OK	
at^scfg=tcp/withurcs,off	Select polling mode (by switching off URC mode).
^SCFG: "Tcp/WithURCs","off"	Polling mode is accepted.
OK	

10.14.2 Configuring Socket Listener

The example assumes that a connection profile has been created as explained in Section 10.1.1 or Section 10.1.2. Keep in mind that if the host is configured as listener another service profile must be left free to be dynamically assigned as Server when the listener receives a connection request from a remote client.

Configure the service profile 4 for use as Socket listener:

at^siss=4,srvType,socket	Select service type Socket.
OK	
at^siss=4,conId,0	Select connection profile 0.
OK	
at^siss=4,address,"socktcp://listener:65534"	The host specifies its local port 65534 to be used for the Socket listener service. The local IP address will be dynamically assigned when the service is opened with AT^SISO.
OK	

Open the Socket service and query the IP address dynamically assigned to the Socket listener:

at^siso=4	Open the Socket service.
OK	
at^siso?	Query the current status of services. All service profiles are unused, except for service profile 4 which is running in listener mode, where <srvState>=3 (listening) and <socketState>=3 (LISTENER). The response also indicates the IP address dynamically assigned to the listener.
^SISO: 0, ""	
^SISO: 1, ""	
^SISO: 2, ""	
^SISO: 3, ""	
^SISO: 4, "Socket","3","3","0","0","10.10.0.187:65534","0.0.0.0:0"	
^SISO: 6, ""	
^SISO: 7, ""	
^SISO: 8, ""	
^SISO: 9, ""	
OK	

10.14.3 Configuring Socket Client for Calling a Socket Listener on Another Host

The example assumes that a connection profile has been created as explained in Section 10.1.1 or Section 10.1.2.

Configure the client's service profile 1 for calling a Socket listener on another host:

`at^siss=1,srvType,socket`	Select service type Socket.
`OK`	
`at^siss=1,conId,0`	Select connection profile 0.
`OK`	
`at^siss=1,address,"socktcp://10.10.0.187:65534"`	The service profile of the client contains the IP address and the TCP port of the remote host.
`OK`	

10.14.4 Socket Client Sends Data via TCP Connection (Polling Mode)

The example uses service profile 0 configured for Socket service and TCP.

`AT^SISO=0`	The host opens service profile 0.
`OK`	Note: URC ^SISW:0, 1 does not appear! The host must poll the service state by means of AT^SISI until the service is in `<srvState>` "Up".
`AT^SISI=0`	
`^SISI: 0,3,0,0,0,0`	The service is still in `<srvState>` "Connecting".
`OK`	
`AT^SISI=0`	
`^SISI: 0,4,0,0,0,0`	The service is now in `<srvState>` "Up" and is ready to accept data.
`OK`	
`AT^SISW=0,10`	The host requests to write 10 bytes.
`^SISW: 0,10,10`	Response that 10 bytes can be sent and are unacknowledged.
`0123456789`	
`OK`	
`AT^SISW=0,10,1`	The host requests to write next 10 bytes and enables the end-of-data flag.
`^SISW: 0,0,10`	But the service refuses the request, even the end-of-data flag remains without effect.
`OK`	
`AT^SISW=0,10,1`	Next try (polling).
`^SISW: 0,10,20`	Response that the service accepts 10 bytes and this data and the previously sent data are unacknowledged.
`0123456789`	
`OK`	
`AT^SISW=0,0,0`	Polling to request unacknowledged data.
`^SISW: 0,0,10`	There are 10 bytes still unacknowledged.
`OK`	
`AT^SISI=0`	Polling for `<srvState>` change ("Closing" -> "Down").
`^SISI: 0,5,0,20,10,10`	20 bytes are transfered via serial interface, 10 bytes are acknowledged by remote peer, 10 bytes are on the way.
`OK`	

AT^SISI=0	Polling for <srvState> change ("Closing" -> "Down").
^SISI: 0,6,0,20,20,0	The Service is in state "Down" and all data is confirmed by the remote peer.
OK	
AT^SISC=0	Closing the Socket service.
OK	

10.14.5 Socket client sends data via TCP connection with URCs

The example uses service profile 0 configured for Socket service and TCP.

AT^SISO=0	The host opens service profile 0.
OK	
^SISW: 0,1	Socket service is ready for upload.
AT^SISW=0,10	The host requests to write 10 bytes.
^SISW: 0,10,10	Response that 10 bytes can be sent and are unacknowledged.
0123456789	
OK	
^SISW: 0,1	The URC indicates that the Socket service is ready to transfer more data. Data of the last AT^SISW command are transferred to the remote host.
AT^SISW=0,10,1	The host requests to write next 10 bytes and enables the end-of-data flag to notify that these are the last 10 bytes of the session.
^SISW: 0,10,20	Response that the service accepts 10 bytes and this data and the previously sent data are unacknowledged.
0123456789	
OK	
------	Waiting for URC.
^SISW: 0,2	Data transfer has been finished.
AT^SISC=0	Closing the Socket service.
OK	

10.14.6 Socket Scenario with UDP Endpoint

The following example shows a communication between a UDP endpoint (host 1) and a UDP client (host 2).
The first part of the example refers to the UDP endpoint and shows the configuration which allows the UDP endpoint to communicate with any UDP client.
The second part shows the settings of a UDP client.
The third and the fourth part are running in parallel: The third part shows the procedures on the UDP endpoint side done when communicating with a UDP client. The fourth part shows the equivalent steps done by the UDP client when communicating with the UDP endpoint.

Part 1 - host 1 is configured for use as UDP endpoint:

AT^SISS=0,srvtype,socket	Select service type Socket.
OK	
AT^SISS=0,conid,1	Select connection profile 1.
OK	
AT^SISS=0,alphabet,1	Choose ASCII alphabet.
OK	
AT^SISS=0,address,"sockudp://:6666"	Specify the local UDP port.
OK	

Part 2 - host 2 is configured for use as UDP client:

AT^SISS=0,srvtype,socket	Select service type Socket.
OK	
AT^SISS=0,conid,1	Select connection profile 1.
OK	
AT^SISS=0,alphabet,1	Choose ASCII alphabet.
OK	
AT^SISS=0,address,"sockudp:// 10.10.0.219:6666"	Specify the address of host 1.
OK	

Part 3 - host 1 opens the service and communicates with host 2:

AT^SISO=0	Open the service.
OK	
^SISW: 0, 1	The URC indicates that host 1 is waiting on UDP port 6666 and can send data to any UDP client.
^SISR: 0, 1	The URC indicates that host 2 has opened the connection to host 1 and has sent some data.
AT^SISR=0, 100	Host 1 requests to read 100 bytes.
OK	
^SISR: 0, 23, 0, 10.10.0.22:6561 Hello, I'm the client!	Host 1 is reading the text string received from host 2 and gets information about the remote client, i.e. the address of host 2.
OK	
AT^SISW=0,1,0,1,"10.10.0.22:6561"	Host 1 starts sending a text string to host 2.
^SISW: 0, 1500, 0 Hi, I'm the UDP endpoint!	Host 1 is sending a text string to host 2. As a result, host 2 is receiving the URC "^SISR: 0, 1" shown below in part 4 of the example.
OK	
^SISW: 0, 1	The URC confirms that host 1 can send data again.
AT^SISC=0	Close the service.
OK	

Part 4 - host 2 opens the service and communicates with host 1:

AT^SISO=0	Open the service.
OK	
^SISW: 0, 1	The URC indicates that theservice is ready.
AT^SISW=0,1,0,1	Host 2 has entered interactive text mode and starts to write.
^SISW: 0, 1500, 0 Hello, I'm the client!	Host 2 is writing a text string. As a result, host 1 is receiving the URC "^SISR: 0, 1" shown above in part 3 of this example.
OK	
^SISW: 0, 1	The URC confirms that there is no further data available.
^SISR: 0, 1	The URC indicates that data has been received.
AT^SISR=0,100	Host 1 requests to read 100 bytes.
OK	
^SISR: 0, 26 Hi, I'm the UDP endpoint.	The response indicates that host 2 has received 26 characters from host 1.
OK	
AT^SISC=0	Close the service.
OK	

10.14.7 Configuring and Using FTP Download (URC Mode)

First set up a connection profile as explained in Section 10.1.1 or Section 10.1.2. Enter at least all parameters which are mandatory for the connection profile.

Configure the service profile 1 for FTP:

at^siss=1,srvType,ftp	Select service type FTP.
OK	
at^siss=1,conId,0	Select connection profile 0.
OK	
at^siss=1,address,"ftp://192.168.1.2;type=d"	Specify FTP address with user and password anonymous.
OK	

Make an FTP connection:

at^siso=1	Open the service.
OK	Bearer is established, service is getting started.
^SISR: 1, 1	Data is available.
at^sisr=1,1500	Request to read 1500 bytes.
^SISR: 1, 50	50 bytes are now available.
hardware	
inttest	
software	
support	
systemtest	
OK	
^SISR: 1, 2	Data transfer finished. No more data available. The connection to the FTP server is closed.
at^sisc=1	Close the service.
OK	

10.14.8 Configuring and Using FTP Upload (URC Mode)

First set up a connection profile as explained in Section 10.1.1 or Section 10.1.2. Enter at least all parameters which are mandatory for the connection profile.

Configure the service profile 1 for FTP:

at^siss=1,srvType,ftp	Select service type FTP.
OK	
at^siss=1,conId,0	Select connection profile 0.
OK	
at^siss=1,address,"ftpput://myname:mypasswd@192.168.1.2/upload/example.bin;type=i"	Specify FTP address with individual user name and password. The file "example.bin" shall be created on the FTP server.
OK	

Make an FTP connection:

at^siso=1	Open the service.
OK	Bearer is established, service is getting started.
^SISW: 1, 1	FTP service is ready for upload.
at^sisw=1,100	Client requests to send 100 bytes.
^SISW: 1,100,100	The write command response confirms that 100 bytes must be transferred now.

012345678901234567890123456789012345678901234567890123456789012345678901234567890123456789012345678901234567890123456789 OK	User data is transferred.
^SISW: 1, 1	URC indicates that the FTP service is ready to transfer more data. Data of the last AT^SISW command is transferred to the remote host.
at^sisw=1,0,1 OK	No more data available. The file "example.bin" shall be closed on the FTP server.
^SISW: 1, 2	Data transfer finished successfully. The connection to the FTP server is closed.
at^sisc=1	Close the FTP service.

10.14.9 Configuring SMPT Service Profile

First set up a connection profile as explained in Section 10.1.1 or Section 10.1.2. Enter at least all parameters which are mandatory for a CSD or GPRS profile. The example uses the connection profile ID 1 and the service profile ID 9.

at^siss=9,srvType,"Smtp" OK	Select service type SMTP.
at^siss=9,alphabet,"1" OK	Choose ASCII alphabet.
at^siss=9,conId,"1" OK	Select connection profile 1.
at^siss=9,address,"192.168.1.2" OK	Specify SMTP server address.
at^siss=9,user,"subscriber1" OK	Specify sender's user name required for SMTP authentication.
at^siss=9,passwd,"subscr1" OK	Specify password used by the sender for SMTP authentication.
at^siss=9,smFrom,"subscriber1@testdomain.com" OK	Sender's email address.
at^siss=9,smRcpt,"subscriber2@testdomain.com" OK	Recipient's email address.
at^siss=9,smSubj,"Meeting Request Sunday Morning" OK	Enter text for subject field.
at^siss=9,smAuth,"1" OK	Sender name and password can be used for SMTP authentication.
at^siss? ^SISS: 0, "srvType", "" ^SISS: 1, "srvType", "" ^SISS: 2, "srvType", "" ^SISS: 3, "srvType", "" ^SISS: 4, "srvType", "" ^SISS: 6, "srvType", "" ^SISS: 7, "srvType", "" ^SISS: 8, "srvType", "" ^SISS: 9, "srvType", "Smtp" ^SISS: 9, "conId", "1" ^SISS: 9, "alphabet", "1" ^SISS: 9, "address", "192.168.1.2" ^SISS: 9, "user", "subscriber1" ^SISS: 9, "passwd", "*******"	To check the profile enter the AT^SISS read command. The response includes the values of all 10 connection profiles. In this example, no values are set for the profiles 0 through 8. Service profile 9 contains the values specified above and the values automatically assumed by default.

```
^SISS: 9, "smFrom", "subscriber1@testdomain.com"
^SISS: 9, "smRcpt", "subscriber2@testdomain.com"
^SISS: 9, "smCC", ""
^SISS: 9, "smSubj", "Meeting Request Sunday Morning"
^SISS: 9, "smHdr", ""
^SISS: 9, "tcPort", "25"                    Default: TCP port number commonly used for SMTP.
^SISS: 9, "smAuth", "1"
^SISS: 9, "tcpMR", "10"                     Default: Number of retransmission attempts for TCP
                                            packets is 10 (= default of AT^SCFG).
^SISS: 9, "tcpOT", "6000"                   Default: Timeout before closing outstanding TCP
                                            connection is 6000 sec (= default of AT^SCFG).
OK
```

10.14.10 Sending Email (URC Mode)

This example uses the service profile described in Section 10.14.9.

```
at^siso=9                                   Open the service, i.e. start to send the email.
OK
^SISW: 9, 1                                 The "^SISW" URC indicates that email data can be
                                            transferred.
at^sisw=9,87                                The email to be sent has 87 bytes.
^SISW: 9,87,87                              The write command response confirms that 87 bytes
                                            are available for transmission.
Good Morning everyone, we are delighted to  Write the message text.
announce our next meeting on Sunday morning.
OK
at^sisw=9,0,1                               Set the <eodFlag> to mark the end of the email
                                            body.
^SISW: 9,0,0                                The <eodFlag> is accepted by the service.
^SISW: 9,2                                  The "^SISW" URC confirms that all data is sent suc-
                                            cessfully.
at^sisi=9                                   Check the connection state of the service profile 9.
^SISI: 9,6,0,87,0,0                         The command response confirms that the SMTP
                                            service is in state "6" (Down) and that 87 bytes have
                                            been transferred.
at^sisc=9                                   Close the service.
OK
```

10.14.11 Sending Email (Polling Mode)

This example uses the service profile described in Section 10.14.9.

```
at^siso=9                                   Open the service, i.e. start to send the email.
OK
at^sisw=9,10                                Try to write 10 bytes.
^SISW: 9, 10, 0                             The service response indicates that 10 bytes can be
                                            written.
Hallo Tom!                                  Write 10 bytes.
OK
at^sisw=9,10                                Try to write 10 bytes.
^SISW: 9, 0, 0                              The service response indicates that the service
                                            refuses to accept any data at the moment.
OK
at^sisw0=9,12                               Try to write 12 bytes.
```

^SISW: 9, 12, 0	The service response indicates that 12 bytes can be written.
Bye Bye Tom!	Write 12 bytes.
OK	
at^sisw=9,0,1	Set the <eodFlag> to mark the end of the email body.
^SISW: 9,0,0	The <eodFlag> is accepted by the service.
OK	
at^sisi=9	Check the connection state of service profile 9.
^SISI: 9,5,0,22,0,0	The command response confirms that the SMTP service is in state "5" (Closing) and that 22 bytes have been written.
OK	
at^sisi=9	Check the connection state of service profile 9.
^SISI: 9,6,0,22,0,0	The command response confirms that the SMTP service is in state "6" (Down) and that 22 bytes have been written.
OK	
at^sise=9	Check error status of service profile 9.
^SISE: 9,0	The command response confirms that no error occurred.
OK	
at^sisc=9	Close the service.
OK	

10.14.12 Configuring POP3 Service Profile

First set up a connection profile as explained in Section 10.1.1 or Section 10.1.2. Enter at least all parameters which are mandatory for a GPRS profile. The example uses the connection profile ID 1 and the service profile ID 1. The service profile is set up to retrieve a specific email (email number 2).

at^siss=1,srvType,"Pop3"	Select service type POP3.
OK	
at^siss=1,conId,"1"	Select connection profile 1.
OK	
at^siss=1,address,"192.168.1.2"	Specify POP3 server address.
OK	
at^siss=1,user,"subscriber1"	Specify recipient's mailbox name.
OK	
at^siss=1,passwd,"subscr1"	Password used by recipient for authentication to POP3 server.
OK	
at^siss=1,pCmd,"3"	Command used to retrieve emails.
OK	
at^siss=1,pNumber,"2"	Email message number 2 shall be retrieved.
OK	
at^siss?	To check the profile enter the AT^SISS read command. The response includes the values of all 10 connection profiles. Service profile 1 contains the values specified above and the values automatically assumed by default.
^SISS: 0, "srvType", ""	
^SISS: 1, "srvType", "Pop3"	
^SISS: 1, "conId", "1"	
^SISS: 1, "alphabet", "0"	Default: Character set enabled with AT+CSCS shall be used.
^SISS: 1, "address", "192.168.1.2"	
^SISS: 1, "user", "subscriber1"	
^SISS: 1, "passwd", "*******"	
^SISS: 1, "pCmd", "3"	
^SISS: 1, "tcPort", "110"	Default: TCP port number commonly used for POP3.
^SISS: 1, "pNumber", "2"	
^SISS: 1, "pLength", "0"	Default: Message size shall not be limited.

^SISS: 1, "pDelFlag", "0"	Default: Retrieved message shall not be deleted on POP3 server.
^SISS: 1, "tcpMR", "10"	Default: Number of retransmission attempts for TCP packets is 10 (= default of AT^SCFG).
^SISS: 1, "tcpOT", "6000"	Default: Timeout before closing outstanding TCP connection is 6000 sec (= default of AT^SCFG).
^SISS: 2, "srvType", ""	
^SISS: 3, "srvType", ""	
^SISS: 4, "srvType", ""	
^SISS: 6, "srvType", ""	
^SISS: 7, "srvType", ""	
^SISS: 8, "srvType", ""	
^SISS: 9, "srvType", ""	
OK	

10.14.13 Retrieving Email (URC Mode)

This example uses the service profile described in Section 10.14.12.

```
at^siso=1                                   Open the service that was created to retrieve email
                                            number 2 from the POP3 server.
OK
^SISR: 1, 1                                 The "^SISR" indicates that data is available for read-
                                            ing.
at^sisr=1,500                               Try to read 500 bytes.
^SISR: 1, 500                               Command response indicates that 500 bytes will be
                                            transferred, i.e. there will be no other URC since the
                                            requested length equals the confirmed length.

Return-Path: <subscriber1@testdomain.com>
X-Original-To: subscriber1@testdomain.com
Delivered-To: subscriber2@testdomain.com
Received: from 10.10.0.132 (unknown [10.10.0.132])
by testdomain.com (Postfix) with SMTP id 379321D004
for <subscriber1@testdomain.com>; Tue, 20 Dec 2005 08:00:07 +0100 (CET)
To: subscriber2@testdomain.com
Cc:
From: subscriber1@testdomain.com
Subject: TestMail
Message-Id: <20051220070007.379321D004@testdomain.com >
Date: Tue, 20 Dec 2005 08:00:07 +0100
OK
at^sisr=1,500                               Try to read another 500 bytes.
at^sisr=1,78                                Command response indicates that only 78 bytes will
                                            transferred.

(CET)
X-UIDL: &lL"!(Z6"!^cl!!1+%"!
Status: RO

Hallo Tom!Bye Bye Tom!
.                                           Dot indicates end of mail according to RFC 2821.
OK
^SISR: 1, 2                                 Parameter <urcCauseId> of the "^SISR" URC
                                            confirms that all data is transferred successfully.
at^sisc=1                                   Close the service.
OK
```

10.14.14 Retrieving Email (Polling Mode)

This example uses the service profile described in Section 10.14.12.

```
at^siso=1                                   Open the service that was created to retrieve email
                                            number 2 from the POP3 server.
OK
at^sisr=1,1000                              Try to read 1000 bytes.
^SISR: 1, 0                                 Command response indicates that currently no data
                                            is available.
OK
at^sisr=1,1000                              Again, try to read 1000 bytes.
^SISR: 1, 0                                 Command response indicates that currently no data
                                            is available.
OK
at^sisr=1,1000                              Again, try to read 1000 bytes.
```

^SISR: 1, 578	Command response indicates that 578 bytes are available for reading.
Return-Path: <subscriber1@testdomain.com> X-Original-To: subscriber1@testdomain.com Delivered-To: subscriber2@testdomain.com Received: from 10.10.0.132 (unknown [10.10.0.132]) by testdomain.com (Postfix) with SMTP id 379321D004 for <subscriber1@testdomain.com>; Tue, 20 Dec 2005 08:00:07 +0100 (CET) To: subscriber2@testdomain.com Cc: From: subscriber1@testdomain.com Subject: TestMail Message-Id: <20051220070007.379321D004@testdomain.com > Date: Tue, 20 Dec 2005 08:00:07 +0100 (CET) X-UIDL: &lL"!(Z6"!^cl!!1+%"! Status: RO Hallo Tom!Bye Bye Tom!	
.	Dot indicates end of mail according to RFC 2821.
OK	
at^sisr=1,1000	Try to read 1000 bytes once again.
^SISR: 1,-2	No more data available to read, i.e. the service has finished.
OK	
at^sisi=1	Check the connection state of service profile 1.
^SISI: 1,6,578,0,0,0 OK	The command response indicates that the POP3 service is in state "6" (Down) and that 578 bytes have been retrieved.
at^sise=1	Check error status of service profile 1.
^SISE: 1,0	The command response confirms that no error occurred.
OK	
at^sisc=1	Close the service.
OK	

10.14.15 HTTP POST (Polling Mode)

at^siss=1,srvType,"Http"	Select service type HTTP.
OK	
at^siss=1,conId,1	Select connection profile 1.
OK	
at^siss=1,hcMethod,1	Select "Post" method.
OK	
at^siss=1,address,"http://192.168.1.3/datafiles/dummy/dummy.txt"	
OK	
at^siss=1,hcContLen,180	Try to upload 180 bytes.
OK	
at^siso=1	Open the service.
OK	
at^sisw=1,100	Send the first 100 bytes.
^SISW: 1, 100, 0	
OK	
at^sisw=1,100	Try to send again 100 bytes.
^SISW: 1, 80, 0	80 bytes are sent.
OK	
at^sisw=1,40	Try to write data once again.

^SISW: 1, 0, 0	No further data available, i.e. the service has finished.
OK	
at^sisi?	
^SISI: 1,6,0,180,0,0	The command response indicates that HTTP service is in state "6" (Down) and that 180 bytes have been sent.
OK	
at^sise=1	Check error status of service profile 1.
^SISE: 1,0	The command response confirms that no error occurred.
OK	
at^sisc=1	Close the service.
OK	

10.14.16 HTTP GET (Polling Mode)

at^siss=0,srvType,"Http"	Select service type HTTP.
OK	
at^siss=0,conId,1	Select connection profile 1.
OK	
at^siss=0,hcMethod,0	
OK	
at^siss=0,address,http://192.168.1.4/	
OK	
at^siso=0	
OK	
at^sisr=0,1500	Start reading data in polling mode.
^SISR: 0, 1264	
...DATA...	
OK	
at^sisr=0,1500	
^SISR: 0, 1500	
...DATA...	
OK	
at^sisr=0,1500	
^SISR: 0, 602	
...DATA...	
OK	
at^sisr=0,1500	Again, try to read 1500 bytes.
^SISR: 0, -2	Nor more data to read, i.e. the service has finished.
OK	
at^sisi?	
^SISI: 0,6,0,3366,0,0	The command response indicates that the HTTP service is in state "6" (Down) and that 3366 bytes have been read.
OK	
at^sise=0	Check error status of service profile 0.
^SISE: 0,0	The command response confirms that no error occurred.
OK	
at^sisc=0	Close the service.
OK	

11. GPRS Commands

This chapter describes AT commands that a TE (Terminal Equipment, e.g. an application running on a controlling PC) may use to control the TC65i acting as GPRS Mobile Termination (MT). Please use chapter "Using GPRS AT commands (Examples)" as a first guidance.

11.1 AT+CGACT PDP context activate or deactivate

Syntax

Test Command

```
AT+CGACT=?
```

Response(s)

```
+CGACT: (list of supported <state>s)
OK
```

Read Command

```
AT+CGACT?
```

Response(s)

```
+CGACT: <cid>, <state>
[+CGACT: <cid>, <state>]
...
OK
```

Write Command

```
AT+CGACT=[<state>[, <cid>[, <cid>[,... ]]]]
```

Response(s)

```
OK
ERROR
+CME ERROR: <err>
```

PIN	ASC0	ASC1	USB	MUX1	MUX2	MUX3	Charge	✈	Last
+	+	+	+	+	+	+	-	+	-

Reference(s)

GSM 07.07

Command Description

The test command is used for requesting information on the supported PDP context activation states.

The read command returns the current activation states for all the defined PDP contexts.

The write command is used to activate or deactivate the specified PDP context(s). After the command has completed, the MT remains in V.250 command state. If any PDP context is already in the requested state, the state for that context remains unchanged. If the MT is not GPRS attached when the activation form of the command is executed, the MT first performs a GPRS attach and them attempts to activate the specified contexts. If no <cid>s are specified the activation/deactivation form of the command activates/deactivates all defined contexts.

Parameter Description

<state>(num)

Indicates the state of PDP context activation.

0	detached
[1]	attached

<cid>(num)

PDP Context Identifier is a numeric parameter which specifies a particular PDP context definition. The parameter is local to the TE-MT interface and is used in other PDP context-related commands.

1...2

Note

- ATH will deactivate any PDP context.

11.2 AT+CGANS Manual response to a network request for PDP context activation

Syntax

Test Command

AT+CGANS=?

Response(s)

+CGANS: (list of supported <response>s), (list of supported <L2P>s)
OK

Write Command

AT+CGANS=[<response>[, <L2P>[, <cid>]]]

Response(s)

CONNECT
NO CARRIER
ERROR
+CME ERROR: <err>

PIN	ASC0	ASC1	USB	MUX1	MUX2	MUX3	Charge	✈	Last
+	+	+	+	+	+	+	-	-	+

Reference(s)

GSM 07.07

Command Description

The write command requests the MT to respond to a network request for GPRS PDP context activation which has been signaled to the TE by the RING or CRING unsolicited result code. The <response> parameter allows the TE to accept or reject the request.

Parameter Description

<response>(num)

[0]	the request is rejected and the MT returns OK to the TE
1	accept and request that the PDP context be activated

<L2P>(str)

a string parameter which indicates the layer 2 protocol to be used (see AT+CGDATA command)

<cid>(num)

a numeric parameter which specifies a particular PDP context definition (see AT+CGDCONT command).

Note

- If <response> is 1, the following procedure is followed by the MT:
  If the <L2P> parameter value is unacceptable to the MT, the MT will return an "ERROR" or "+CME ERROR: <err>" response. Otherwise, the MT issues the intermediate result code CONNECT and enters V.250 online data state.
  A <cid> may be specified for use in the context activation request.
  During the PDP startup procedure the MT has the PDP type and the PDP address provided by the network in the Request PDP context activation message. If this is in conflict with the information provided by a specified <cid>, the command will fail. There will be no conflict, if the PDP type matches exactly and the PDP address given by the context definition for <cid> is empty or matches exactly with the address specified with the network PDP context activation message.
  The context will be activated using the values for PDP type and address provided by the network, together with all other information found in the PDP context definition. An APN may or may not be required, depending on the application.

If no <cid> is given or if there is no matching context definition, the MT will attempt to activate the context using the values for PDP type and address provided by the network. The other parameters will be set to their default values (see AT+CGDCONT).
If activation is successful, data transfer may proceed.
After data transfer is complete, and the layer 2 protocol termination procedure has completed successfully, the V.250 command state is reentered and the MT returns the final result code OK.
In the event of an erroneous termination or a failure to start up, the V.250 command state is re-entered and the MT returns the final result code NO CARRIER, or if enabled, "+CME ERROR: <err>". Attach, activate and other errors may be reported. It is also an error to issue the AT+CGANS command when there is no pending network request.
The command may be used in both normal and modem compatibility modes.

11.3 AT+CGATT GPRS attach or detach

Syntax

Test Command
AT+CGATT=?
Response(s)
+CGATT: (list of supported <state>s) OK

Read Command
AT+CGATT?
Response(s)
+CGATT: <state> OK

Write Command
AT+CGATT=[<state>]
Response(s)
OK ERROR +CME ERROR: <err>

PIN	ASC0	ASC1	USB	MUX1	MUX2	MUX3	Charge	✈	Last
+	+	+	+	+	+	+	-	-	-

Reference(s)
GSM 07.07

Command Description

The test command is used for requesting information on the supported GPRS service states.

The read command returns the current GPRS service state.

The write command is used to attach the MT to, or detach the MT from the GPRS service. After the command has completed, the MT remains in V.250 command state. If the MT is already in the requested state, the command is ignored and the OK response is returned. Any active PDP contexts will be automatically deactivated when the attachment state changes to detached.

Parameter Description

<state>(num)

Indicates the state of GPRS attachement.

0(P)	detached
[1]	attached

Notes

- If the MT is in dedicated mode, write command returns "+CME ERROR: operation temporary not allowed".
- When the module is GPRS attached and a PLMN reselection occurs to a non-GPRS network or to a network where the SIM is not subscribed to for using GPRS, the resulting GMM (GPRS mobility management) state according to GSM 24.008 is REGISTERED/NO CELL, meaning that the read command will still show <state>=1.
- Under some network conditions the GPRS attach command fails, if entered immediately after a "+CREG: 1" URC. This can be avoided by waiting at least 1s before entering the GPRS attach command.

11.4 AT+CGAUTO Automatic response to a network request for PDP context activation

Syntax

Test Command
AT+CGAUTO=?
Response(s)
+CGAUTO: (list of supported <n>s) OK

Read Command
AT+CGAUTO?
Response(s)
+CGAUTO: <n> OK

Write Command
AT+CGAUTO=[<n>]
Response(s)
OK ERROR +CME ERROR: <err>

PIN	ASC0	ASC1	USB	MUX1	MUX2	MUX3	Charge	✈	Last
+	+	+	+	+	+	+	-	-	-

Reference(s)
GSM 07.07

Command Description

The test command returns the values of <n> supported by the MT as a compound value.

The write command disables or enables an automatic positive response (auto-answer) to the receipt of a Request PDP Context Activation message from the network. It also provides control over the use of the V.250 basic commands ATS0, ATA and ATH for handling network requests for PDP context activation.

Parameter Description

<n>(num)	
0	Disable automatic response for network requests for GPRS PDP context activation. GPRS network requests are manually accepted or rejected by the AT+CGANS command.
1	Enable automatic response for network requests for GPRS PDP context activation. GPRS requests are automatically accepted according to the description below.
3(&F)(P)	Modem compatibility mode. The automatic acceptance of both GPRS and incoming CSD calls is controlled by the ATS0 command. Manual control uses the ATA and ATH commands, respectively, to accept or reject GPRS network requests or incoming CSD calls.

Notes

- It is allowed to have different AT+CGAUTO settings on different interfaces.
- When the AT+CGAUTO=0 command is received, the MT will not perform a GPRS detach if it is attached. Subsequently, when the MT announces a network request for PDP context activation by issuing the URC RING or CRING, the TE may manually accept or reject the request by issuing the AT+CGANS command or may simply ignore the network request.

- When the AT+CGAUTO=1 command is received, the MT will attempt to perform a GPRS attach if it is not yet attached. Failure will result in ERROR or, if enabled +CME ERROR being returned to the TE. Subsequently, the MT announces a network request for PDP context activation by issuing the URC RING to the TE, followed by the intermediate result code CONNECT. The MT then enters V.250 online data state and follows the same procedure as it would after having received a +CGANS=1 with no <L2P> or <cid> values specified.
- If a GPRS attach will be initiated by this command and the MT is not able to attach for more than 385 seconds (timer T3310 expired), command returns with "ERROR" or "+CME ERROR: unknown", but MT is still trying to attach and the requested automatic mode <n> is in use.
- If a network request for PDP context activation is answered automatically and if another AT command is issued at the same time on the same interface, then this AT command is not executed. Any response belongs to the automatic context activation procedure. If the AT command which caused the collision was a circuit switched data call, the CONNECT response does not belong to this data call but to the GPRS. This can be detected if ATX is not set to 0. CS data call will issue CONNECT <text>, GPRS will issue CONNECT only.

11.5 AT+CGDATA Enter data state

Syntax

Test Command

AT+CGDATA=?

Response(s)

+CGDATA: (list of supported <L2P>s)
OK

Write Command

AT+CGDATA=[<L2P>[, <cid>[, <cid>]]]

Response(s)

CONNECT
NO CARRIER
ERROR
+CME ERROR: <err>

PIN	ASC0	ASC1	USB	MUX1	MUX2	MUX3	Charge	✈	Last
+	+	+	+	+	+	+	-	-	+

Reference(s)

GSM 07.07

Command Description

The test command is used for requesting information on the supported layer 2 protocols to be used between the TE and MT.

The write command causes the MT to perform all actions which are necessary to establish communication between the TE and the network using one or more GPRS PDP types. This may include performing a GPRS attach and one or more PDP context activations. Commands following the AT+CGDATA command in the AT command line will not be processed by the MT.
If no <cid> is given or if there is no matching context definition, the MT will attempt to activate the context with PDP type IP and all other context parameters set to their default values (see AT+CGDCONT, AT+CGQREQ, AT+CGQMIN).
If the <L2P> parameter is omitted, the layer 2 protocol is unspecified and PPP will be used.
If the write command is successful, the MT issues the intermediate result code CONNECT and enters V.250 online data state.
After data transfer is complete, and the layer 2 protocol termination procedure has completed successfully, the command state is reentered and the MT returns the final result code OK.
If the <L2P> parameter value is unacceptable to the MT, the MT returns ERROR or +CME ERROR.
In the event of erroneous termination or a failure to start up, the command state is reentered and the MT returns NO CARRIER, or if enabled +CME ERROR.

Parameter Description

<L2P>(str)

Layer 2 protocol to be used between the TE and MT.

[“PPP“]	layer 2 protocol PPP

<cid>(num)

Parameter specifies a particular PDP context definition. The parameter is local to the TE-MT interface and is used in other PDP context-related commands.

1...2

Notes

- If the MT is in dedicated mode, write command returns "+CME ERROR: operation temporary not allowed".
- It is possible to leave the GPRS data mode and enter the command mode by using the V.250 command +++. By using the command AT+CGDATA again, the data mode is reentered. Which context is used to return to data mode, depends on the supplied parameter <cid>.
  If no <cid> is specified, this is equivalent to using the V.250 command ATO, which is usable for GPRS connections too. In this case the first context will be used, which is active and already in data mode since it has been activated.
  It is possible to use AT+CGDATA to enter the data mode for a context, which is not yet in data mode since it has been activated. With ATO this is not possible.

11.5.1 Automatic deactivation of PDP context during dial-up PPP

When using the AT+CGDATA write command or ATD*99# or ATD*98# the MT issues the intermediate result code CONNECT and enters V.250ter online data state. In V.250 online data state, first some LCP protocol exchange between MT and TE is performed to set up the PPP link. After successfully establishing the PPP link, the MT performs the PDP context activation procedure if the context is not already activated. As a result, the MT is in a "PDP context activated" state within the PLMN, the PPP link is established on the mobile side and the mobile is ready for IP data transfer.
If the TE wants to close the LCP link the MT may perform an LCP termination request procedure on PPP level. After this LCP termination procedure the MT deactivates the PDP context automatically and the MT returns to V.250 command mode and issues the final result code NO CARRIER.
During the implicit PDP context deactivation procedure after LCP termination the TE may change into V.250 command state (e.g. by using +++ or by toggling DTR if AT&D is set to 1) before the result NO CARRIER occurs. In this case the application should not try to deactivate the PDP context by using the commands AT+CGACT or ATH. If DTR is configured to disconnect data connections (AT&D2), then the application should not toggle DTR during the implicit PDP context deactivation and before "NO CARRIER" is received.

11.6 AT+CGDCONT Define PDP Context

Syntax

Test Command

AT+CGDCONT=?

Response(s)

+CGDCONT: (range of supported<cid>s), <PDP_type>, , , (list of supported <d_comp>s), (list of supported <h_comp>s)
OK
ERROR
+CME ERROR: <err>

Read Command

AT+CGDCONT?

Response(s)

[+CGDCONT: <cid>, <PDP_type>, <APN>, <PDP_addr>, <d_comp>, <h_comp>]
[+CGDCONT: ...]
OK
ERROR
+CME ERROR: <err>

Write Command

AT+CGDCONT=[<cid>[, <PDP_type>[, <APN>[, <PDP_addr>[, <d_comp>[, <h_comp>]]]]]]

Response(s)

OK
ERROR
+CME ERROR: <err>

PIN	ASC0	ASC1	USB	MUX1	MUX2	MUX3	Charge	✈	Last
+	+	+	+	+	+	+	-	+	-

Reference(s)

GSM 07.07

Command Description

The test command returns supported values as a compound value.

The read command returns the current settings for each defined PDP context.

The write command specifies the parameters for a PDP context identified by the context identifier <cid>. The number of contexts that may be in a defined state at the same time is given by the range returned by the test command. A special form of the write command (AT+CGDCONT=<cid>) causes the values for context <cid> to become undefined.

Parameter Description

<cid>(num)

PDP Context Identifier

Parameter specifies a particular PDP context definition. The parameter is local to the TE-MT interface and is used in other PDP context-related commands.

1...2

<PDP_type>(str)

Packet Data Protocol type

Specifies the type of the packet data protocol.

“IP“	Internet Protocol (IETF STD 5)

<APN>(str)

Access Point Name

The logical name that is used to select the GGSN or the external packet data network. If the value is null or omitted, then the subscription value will be requested.

<PDP_addr>(str)

Packet Data Protocol address

Identifies the MT in the address space applicable to PDP (e.g. IP V4 address for PDP type IP). If the value is null or omitted, then a value may be provided by the TE during the PDP startup procedure or, failing that, a dynamic address will be requested.

<d_comp>(num)

Data Compression

Controls the PDP data compression (applicable for Subnetwork Dependent Convergence Protocol (SNDCP) only) 3GPP TS 44.065

[0]	off

<h_comp>(num)

Header Compression

Controls the PDP header compression 3GPP TS 44.065, 3GPP TS 25.323

[0]	off
1	on

Notes

- The MT supports PDP type IP only.
- All context definitions will be stored non volatile if the ME is configured accordingly (see AT^SCFG parameter "GPRS/PersistentContexts" (<gpc>)).
- If the non volatile storage of CGDCONT settings is not activated by the AT^SCFG parameter "GPRS/PersistentContexts", then AT&F and ATZ will undefine every context which is not active or not online.

11.7 AT+CGEQMIN Rel. 99 Quality of Service Profile (Minimum acceptable)

Syntax

Test Command

AT+CGEQMIN=?

Response(s)

+CGEQMIN: <PDP_type>, (list of supported <Traffic class>s), (list of supported <Maximum bitrate UL>s), (list of supported <Maximum bitrate DL>s), (list of supported <Guaranteed bitrate UL>s), (list of supported <Guaranteed bitrate DL>s), (list of supported <Delivery order>s), (list of supported <Maximum SDU size>s), (list of supported <SDU error ratio>s), (list of supported <Residual bit error ratio>s), (list of supported <Delivery of erroneous SDUs>s), (list of supported <Transfer delay>s), (list of supported <Traffic handling priority>s)
OK

Read Command

AT+CGEQMIN?

Response(s)

[+CGEQMIN: <cid>, <Traffic class>, <Maximum bitrate UL>, <Maximum bitrate DL>, <Guaranteed bitrate UL>, <Guaranteed bitrate DL>, <Delivery order>, <Maximum SDU size>, <SDU error ratio>, <Residual bit error ratio>, <Delivery of erroneous SDUs>, <Transfer delay>, <Traffic handling priority>]
[+CGEQMIN: ...]

Write Command

AT+CGEQMIN=[<cid>[, <Traffic class>[, <Maximum bitrate UL>[, <Maximum bitrate DL>[, <Guaranteed bitrate UL>[, <Guaranteed bitrate DL>[, <Delivery order>[, <Maximum SDU size>[, <SDU error ratio>[, <Residual bit error ratio>[, <Delivery of erroneous SDUs>[, <Transfer delay>[, <Traffic handling priority>]]]]]]]]]]]]]

Response(s)

OK
ERROR
+CME ERROR: <err>

PIN	ASC0	ASC1	USB	MUX1	MUX2	MUX3	Charge	✈	Last
+	+	+	+	+	+	+	-	+	-

Reference(s)

3GPP TS 27.007

Command Description

The test command returns values supported as a compound value.

The read command returns the current settings for each defined context.

The write command allows the TE to specify a Quality of Service Profile for the context identified by the (local) context identification parameter <cid> which is checked by the MT against the negotiated profile returned in the Activate/Modify PDP Context Accept message.
A special form of the write command, AT+CGEQMIN=<cid> causes the requested profile for context number <cid> to become undefined.
AT&F and ATZ will undefine the QoS profiles of every context which is not active or not online.

Parameter Description

<cid>(num)

Parameter specifies a particular PDP context definition. The parameter is local to the TE-MT interface and is used in other PDP context-related commands.

1...2

<Traffic class>(num)

0	conversational
1	streaming
2	interactive
3	background
[4]	subscribed value

<Maximum bitrate UL>(num)

This parameter indicates the maximum number of kbits/s delivered to UMTS (up-link traffic) at a SAP. As an example a bitrate of 32kbit/s would be specified as 32 (e.g. AT+CGEQMIN=...,32,...).

[0]	subscribed value
1...63	
64...128	(value needs to be divisible by 8 without remainder)
256	
512	

<Maximum bitrate DL>(num)

This parameter indicates the maximum number of kbits/s delivered by UMTS (down-link traffic) at a SAP. As an example a bitrate of 32kbit/s would be specified as 32 (e.g. AT+CGEQMIN=...,32,...).

[0]	subscribed value
1...63	
64...256	(value needs to be divisible by 8 without remainder)
512	

<Guaranteed bitrate UL>(num)

This parameter indicates the guaranteed number of kbits/s delivered to UMTS (up-link traffic) at a SAP (provided that there is data to deliver). As an example a bitrate of 32kbit/s would be specified as 32 (e.g. AT+CGEQMIN=...,32,...).

[0]	subscribed value
1...63	
64...128	(value needs to be divisible by 8 without remainder)

<Guaranteed bitrate DL>(num)

This parameter indicates the guaranteed number of kbits/s delivered by UMTS (down-link traffic) at a SAP (provided that there is data to deliver). As an example a bitrate of 32kbit/s would be specified as 32 (e.g. AT+CGEQMIN=...,32,...).

[0]	subscribed value
1...63	
64...256	(value needs to be divisible by 8 without remainder)

<Delivery order>(num)

This parameter indicates whether the UMTS bearer shall provide in-sequence SDU delivery or not.

0	no
1	yes
[2]	subscribed value

<Maximum SDU size>(num)

This parameter indicates the maximum allowed SDU size in octets.

[0]	subscribed value
10...1520	(value needs to be divisible by 10 without remainder)
1502	

<SDU error ratio>(str)

This parameter indicates the target value for the fraction of SDUs lost or detected as erroneous. SDU error ratio is defined only for conforming traffic. The value is specified as "mEe". As an example a target SDU error ratio of $5*10^{-3}$ would be specified as "5E3" (e.g. AT+CGEQMIN=...,"5E3",...).

[“0E0“]	subscribed value
“1E2“	
“7E3“	
“1E3“	
“1E4“	
“1E5“	
“1E6“	
“1E1“	

<Residual bit error ratio>(str)

This parameter indicates the target value for the undetected bit error ratio in the delivered SDUs. If no error detection is requested, Residual bit error ratio indicates the bit error ratio in the delivered SDUs. The value is specified as "mEe". As an example a target residual bit error ratio of $5*10^{-3}$ would be specified as "5E3" (e.g. AT+CGEQMIN=...,"5E3",...).

[“0E0“]	subscribed value
“5E2“	
“1E2“	
“5E3“	
“4E3“	
“1E3“	
“1E4“	
“1E5“	
“1E6“	
“6E8“	

<Delivery of erroneous SDUs>(num)

This parameter indicates whether SDUs detected as erroneous shall be delivered or not.

0	no
1	yes
2	no detect
[3]	subscribed value

`<Transfer delay>`(num)

This parameter indicates the targeted time between request to transfer an SDU at one SAP to its delivery at the other SAP, in milliseconds.

[0]	subscribed value
10...150	(value needs to be divisible by 10 without remainder)
200...950	(value needs to be divisible by 50 without remainder)
1000...4000	(value needs to be divisible by 100 without remainder)

`<Traffic handling priority>`(num)

This parameter specifies the relative importance for handling of all SDUs belonging to the UMTS bearer compared to the SDUs of the other bearers.

[0]	subscribed
1	
2	
3	

`<PDP_type>`(str)

Packet Data Protocol Type

“IP“

Notes

- If parameters are not defined, the parameter default values depend on the HLR-stored subscribed default values.
- Definitions of parameters can be found in 3GPP TS 23.107

11.8 AT+CGEQREQ Rel. 99 Quality of Service Profile (Requested)

Syntax

Test Command

AT+CGEQREQ=?

Response(s)

+CGEQREQ: <PDP_type>, (list of supported <Traffic class>s), (list of supported <Maximum bitrate UL>s), (list of supported <Maximum bitrate DL>s), (list of supported <Guaranteed bitrate UL>s), (list of supported <Guaranteed bitrate DL>s), (list of supported <Delivery order>s), (list of supported <Maximum SDU size>s), (list of supported <SDU error ratio>s), (list of supported <Residual bit error ratio>s), (list of supported <Delivery of erroneous SDUs>s), (list of supported <Transfer delay>s), (list of supported <Traffic handling priority>s)

OK

Read Command

AT+CGEQREQ?

Response(s)

[+CGEQREQ: <cid>, <Traffic class>, <Maximum bitrate UL>, <Maximum bitrate DL>, <Guaranteed bitrate UL>, <Guaranteed bitrate DL>, <Delivery order>, <Maximum SDU size>, <SDU error ratio>, <Residual bit error ratio>, <Delivery of erroneous SDUs>, <Transfer delay>, <Traffic handling priority>]

[+CGEQREQ: ...]

Write Command

AT+CGEQREQ=[<cid>[, <Traffic class>[, <Maximum bitrate UL>[, <Maximum bitrate DL>[, <Guaranteed bitrate UL>[, <Guaranteed bitrate DL>[, <Delivery order>[, <Maximum SDU size>[, <SDU error ratio>[, <Residual bit error ratio>[, <Delivery of erroneous SDUs>[, <Transfer delay>[, <Traffic handling priority>]]]]]]]]]]]]]

Response(s)

OK

ERROR

+CME ERROR: <err>

PIN	ASC0	ASC1	USB	MUX1	MUX2	MUX3	Charge	✈	Last
+	+	+	+	+	+	+	-	+	-

Reference(s)

3GPP TS 27.007

Command Description

The test command returns values supported as a compound value.

The read command returns the current settings for each defined context.

The write command allows the TE to specify a Quality of Service Profile for the context identified by the (local) context identification parameter <cid> which is used when the MT sends an Activate PDP Context Request message to the network.
A special form of the write command, AT+CGEQREQ=<cid> causes the requested profile for context number <cid> to become undefined.
AT&F and ATZ will undefine the QoS profiles of every context which is not active or not online.

Parameter Description

<cid>(num)

Parameter specifies a particular PDP context definition. The parameter is local to the TE-MT interface and is used in other PDP context-related commands.

1...2

<Traffic class>(num)

0	conversational
1	streaming
2	interactive
3	background
[4]	subscribed value

<Maximum bitrate UL>(num)

This parameter indicates the maximum number of kbits/s delivered to UMTS (up-link traffic) at a SAP. As an example a bitrate of 32kbit/s would be specified as 32 (e.g. AT+CGEQREQ=...,32,...).

[0]	subscribed value
1...63	
64...128	(value needs to be divisible by 8 without remainder)
256	
512	

<Maximum bitrate DL>(num)

This parameter indicates the maximum number of kbits/s delivered by UMTS (down-link traffic) at a SAP. As an example a bitrate of 32kbit/s would be specified as 32 (e.g. AT+CGEQREQ=...,32,...).

[0]	subscribed value
1...63	
64...256	(value needs to be divisible by 8 without remainder)
512	

<Guaranteed bitrate UL>(num)

This parameter indicates the guaranteed number of kbits/s delivered to UMTS (up-link traffic) at a SAP (provided that there is data to deliver). As an example a bitrate of 32kbit/s would be specified as 32 (e.g. AT+CGEQREQ=...,32,...).

[0]	subscribed value
1...63	
64...128	(value needs to be divisible by 8 without remainder)

<Guaranteed bitrate DL>(num)

This parameter indicates the guaranteed number of kbits/s delivered by UMTS (down-link traffic) at a SAP (provided that there is data to deliver). As an example a bitrate of 32kbit/s would be specified as 32 (e.g. AT+CGEQREQ=...,32,...).

[0]	subscribed value
1...63	
64...256	(value needs to be divisible by 8 without remainder)

<Delivery order>(num)

This parameter indicates whether the UMTS bearer shall provide in-sequence SDU delivery or not.

0	no
1	yes
[2]	subscribed value

<Maximum SDU size>(num)

This parameter indicates the maximum allowed SDU size in octets.

[0]	subscribed value
10...1520	(value needs to be divisible by 10 without remainder)
1502	

<SDU error ratio>(str)

This parameter indicates the target value for the fraction of SDUs lost or detected as erroneous. SDU error ratio is defined only for conforming traffic. The value is specified as "mEe". As an example a target SDU error ratio of $5*10^{-3}$ would be specified as "5E3" (e.g. AT+CGEQREQ=...,"5E3",...).

[“0E0“]	subscribed value
“1E2“	
“7E3“	
“1E3“	
“1E4“	
“1E5“	
“1E6“	
“1E1“	

<Residual bit error ratio>(str)

This parameter indicates the target value for the undetected bit error ratio in the delivered SDUs. If no error detection is requested, Residual bit error ratio indicates the bit error ratio in the delivered SDUs. The value is specified as "mEe". As an example a target residual bit error ratio of $5*10^{-3}$ would be specified as "5E3" (e.g. AT+CGEQREQ=...,"5E3",...).

[“0E0“]	subscribed value
“5E2“	
“1E2“	
“5E3“	
“4E3“	
“1E3“	
“1E4“	
“1E5“	
“1E6“	
“6E8“	

<Delivery of erroneous SDUs>(num)

This parameter indicates whether SDUs detected as erroneous shall be delivered or not.

0	no
1	yes
2	no detect
[3]	subscribed value

<Transfer delay>(num)

This parameter indicates the targeted time between request to transfer an SDU at one SAP to its delivery at the other SAP, in milliseconds.

[0]	subscribed value
10...150	(value needs to be divisible by 10 without remainder)
200...950	(value needs to be divisible by 50 without remainder)
1000...4000	(value needs to be divisible by 100 without remainder)

<Traffic handling priority>(num)

This parameter specifies the relative importance for handling of all SDUs belonging to the UMTS bearer compared to the SDUs of the other bearers.

[0]	subscribed
1	
2	
3	

<PDP_type>(str)

Packet Data Protocol Type

“IP“

Notes

- If parameters are not defined, the parameter default values depend on the HLR-stored subscribed default values.
- Definitions of parameters can be found in 3GPP TS 23.107

11.9 AT+CGPADDR Show PDP address

Syntax

Test Command

AT+CGPADDR=?

Response(s)

[+CGPADDR: (list of defined <cid>s)]
OK

Write Command

AT+CGPADDR=[<cid>[,<cid>]]

Response(s)

[+CGPADDR: <cid>, <PDP_address>]
[+CGPADDR: <cid>, <PDP_address>]
OK
ERROR
+CME ERROR: <err>

PIN	ASC0	ASC1	USB	MUX1	MUX2	MUX3	Charge	✈	Last
+	+	+	+	+	+	+	-	+	-

Reference(s)

GSM 07.07

Command Description

The test command returns a list of defined <cid>s.

The write command returns a list of PDP addresses for the specified context identifiers. If no <cid> is specified, the addresses for all defined contexts are returned.

Parameter Description

<cid>(num)

A numeric parameter which specifies a particular PDP context definition (see AT+CGDCONT command).

<PDP_address>(str)

A string that identifies the MT in the address space applicable to the PDP. The address may be static or dynamic.

Note

- If no <cid> is specified, the write command will return a list of all defined contexts.

11.10 AT+CGQMIN Quality of Service Profile (Minimum acceptable)

Syntax

Test Command

AT+CGQMIN=?

Response(s)

+CGQMIN: <PDP_type>, (list of supported <precedence>s), (list of supported <delay>s), (list of supported <reliability>s), (list of supported <peak>s), (list of supported <mean>s)
OK
ERROR
+CME ERROR: <err>

Read Command

AT+CGQMIN?

Response(s)

[+CGQMIN: <cid>, <precedence>, <delay>, <reliability>, <peak>, <mean>]
[+CGQMIN: ...]
OK
ERROR
+CME ERROR: <err>

Write Command

AT+CGQMIN=[<cid>[, <precedence>[, <delay>[, <reliability>[, <peak>[, <mean>]]]]]]

Response(s)

OK
ERROR
+CME ERROR: <err>

PIN	ASC0	ASC1	USB	MUX1	MUX2	MUX3	Charge	✈	Last
+	+	+	+	+	+	+	-	+	-

Reference(s)

GSM 07.07

Command Description

The test command returns values supported as a compound value. If the MT supports several PDP types, the parameter value ranges for each PDP type are returned on a separate line.

The read command returns the current settings for each defined context.

This command allows the TE to specify a minimum acceptable profile which is checked by the MT against the negotiated profile returned in the Activate PDP Context Accept message.
The set command specifies a profile for the context identified by the (local) context identification parameter, <cid>.
Please note, that the parameters of the minimum acceptable profile need to meet the following condition:

```
((AT+CGQMIN.<delay>= 0) OR (AT+CGQREQ.<delay> ≤ AT+CGQMIN.<delay>)) AND
((AT+CGQMIN.<reliability>= 0) OR
  (AT+CGQREQ.<reliability> ≤ AT+CGQMIN.<reliability>)) AND
((AT+CGQMIN.<peak>= 0) OR (AT+CGQREQ.<peak> ≥ AT+CGQMIN.<peak>)) AND
((AT+CGQMIN.<precedence>= 0) OR
  (AT+CGQREQ.<precedence> ≤ AT+CGQMIN.<precedence>)) AND
(AT+CGQREQ.<mean> ≥ AT+CGQMIN.<mean>)
```

If this condition is not fulfilled or the network does not support all of the specified minimum QoS settings, then the activation of the associated context will fail.
A special form of the set command, AT+CGQMIN= <cid> causes the minimum acceptable profile for context number <cid> to become undefined. In this case no check is made against the negotiated profile.
AT&F and ATZ will undefine the minimum QoS profiles of every context which is not active or not online.

Parameter Description

`<cid>`(num)

Parameter specifies a particular PDP context definition. The parameter is local to the TE-MT interface and is used in other PDP context-related commands.

1...2

`<precedence>`(num)

Precedence class

[0]	network subscribed value
1	High Priority Service commitments shall be maintained ahead of precedence classes 2 and 3
2	Normal priority Service commitments shall be maintained ahead of precedence class 3
3	Low priority Service commitments shall be maintained

`<delay>`(num)

Delay class

The delay parameter defines the end-to-end transfer delay incurred in the transmission of SDUs through the GPRS network(s).

[0]	network subscribed value
1..4	SDU size: 128 octets:

Delay Class	Mean Transfer Delay	95 percentile
1 (Predictive)	<0.5	<1.5
2 (Predictive)	<5	<25
3 (Predictive)	<50	<250
4 (Best Effort)	Unspecified	

SDU size: 1024 octets:

Delay Class	Mean Transfer Delay	95 percentile
1 (Predictive)	<0.5	<1.5
2 (Predictive)	<5	<25
3 (Predictive)	<50	<250
4 (Best Effort)	Unspecified	

`<reliability>`(num)

Reliability class

[0]	network subscribed value
1	Non real-time traffic, error-sensitive application that cannot cope with data loss
2	Non real-time traffic, error-sensitive application that can cope with infrequent data loss
3	Non real-time traffic, error-sensitive application that can cope with data loss, GMM/SM, and SMS

4	Real-time traffic, error-sensitive application that can cope with data loss
5	Real-time traffic, error non-sensitive application that can cope with data loss

`<peak>`(num)

Peak throughput class (in octets per second).

[0]	network subscribed value
1	Up to 1 000 (8 kbit/s).
2	Up to 2 000 (16 kbit/s).
3	Up to 4 000 (32 kbit/s).
4	Up to 8 000 (64 kbit/s).
5	Up to 16 000 (128 kbit/s).
6	Up to 32 000 (256 kbit/s).
7	Up to 64 000 (512 kbit/s).
8	Up to 128 000 (1024 kbit/s).
9	Up to 256 000 (2048 kbit/s).

`<mean>`(num)

Mean throughput class(in octets per hour).

[0]	network subscribed value
1	100 (~0.22 bit/s)
2	200 (~0.44 bit/s)
3	500 (~1.11 bit/s)
4	1 000 (~2.2 bit/s)
5	2 000 (~4.4 bit/s)
6	5 000 (~11.1 bit/s)
7	10 000 (~22 bit/s)
8	20 000 (~44 bit/s)
9	50 000 (~111 bit/s)
10	100 000 (~0.22 kbit/s)
11	200 000(~0.44 kbit/s)
12	500 000(~1.11 kbit/s)
13	1 000 000 (~2.2 kbit/s)
14	2 000 000 (~4.4 kbit/s)
15	5 000 000 (~11.1 kbit/s)
16	10 000 000 (~22 kbit/s)
17	20 000 000 (~44 kbit/s)
18	50 000 000 (~111 kbit/s)
31	best effort

`<PDP_type>`(str)

Packet Data Protocol Type

“IP“

Notes

- If parameters are not defined, the parameter default values depend on the HLR-stored subscribed default values.
- Definitions of parameters in GSM 02.60 and GSM 03.60 paragraph 15.2 "Quality of Service Profile".

Example

If some of the QoS parameters are omitted, they will keep their current value (or the default value if not specified so far), e.g.:

```
AT+CGDCONT=1,"IP"
OK
AT+CGQMIN=
OK
AT+CGQMIN?
+CGQMIN:1,0,0,0,0,0
OK
AT+CGQMIN=1,0
OK
AT+CGQMIN?
+CGQMIN:1,0,0,0,0,0
OK
AT+CGQMIN=1,0,0,0,1
OK
AT+CGQMIN?
+CGQMIN:1,0,0,0,1,0
OK
AT+CGQMIN=1,1
OK
AT+CGQMIN?
+CGQMIN:1,1,0,0,1,0
OK
```

11.11 AT+CGQREQ Quality of Service Profile (Requested)

Syntax

Test Command

AT+CGQREQ=?

Response(s)

+CGQREQ: <PDP_type>, (list of supported <precedence>s), (list of supported <delay>s), (list of supported <reliability>s), (list of supported <peak>s), (list of supported <mean>s)
OK

Read Command

AT+CGQREQ?

Response(s)

[+CGQREQ: <cid>, <precedence>, <delay>, <reliability>, <peak>, <mean>]
[+CGQREQ: ...]

Write Command

AT+CGQREQ=[<cid>[, <precedence>[, <delay>[, <reliability>[, <peak>[, <mean>]]]]]]

Response(s)

OK
ERROR
+CME ERROR: <err>

PIN	ASC0	ASC1	USB	MUX1	MUX2	MUX3	Charge	✈	Last
+	+	+	+	+	+	+	-	+	-

Reference(s)

GSM 07.07

Command Description

The test command returns values supported as a compound value. If the MT supports several PDP types, the parameter value ranges for each PDP type are returned on a separate line.

The read command returns the current settings for each defined context.

This command allows the TE to specify a Quality of Service Profile that is used when the MT sends an Activate PDP Context Request message to the network.
The set command specifies a profile for the context identified by the (local) context identification parameter, <cid>.
Please note, that the parameters of the requested QoS profile need to meet the following condition:

```
((AT+CGQMIN.<delay>= 0) OR (AT+CGQREQ.<delay> ≤ AT+CGQMIN.<delay>)) AND
((AT+CGQMIN.<reliability>= 0) OR
  (AT+CGQREQ.<reliability> ≤ AT+CGQMIN.<reliability>)) AND
((AT+CGQMIN.<peak>= 0) OR (AT+CGQREQ.<peak> ≥ AT+CGQMIN.<peak>)) AND
((AT+CGQMIN.<precedence>= 0) OR
  (AT+CGQREQ.<precedence> ≤ AT+CGQMIN.<precedence>)) AND
(AT+CGQREQ.<mean> ≥ AT+CGQMIN.<mean>)
```

If this condition is not fulfilled or the network does not support all of the requested QoS settings, then the activation of the associated context will fail.
A special form of the set command, +CGQREQ=<cid> causes the requested profile for context number <cid> to become undefined.
AT&F and ATZ will undefine the QoS profiles of every context which is not active or not online.

Parameter Description

`<cid>`(num)

Parameter specifies a particular PDP context definition. The parameter is local to the TE-MT interface and is used in other PDP context-related commands.

1...2

`<precedence>`(num)

Precedence class

[0]	network subscribed value
1	High Priority Service commitments shall be maintained ahead of precedence classes 2 and 3
2	Normal priority Service commitments shall be maintained ahead of precedence class 3
3	Low priority Service commitments shall be maintained

`<delay>`(num)

Delay class

This parameter defines the end-to-end transfer delay incurred in the transmission of SDUs through the GPRS network(s).

[0] network subscribed value

1..4 with SDU size = 128 octets:

Delay Class	Mean Transfer Delay	95 percentile
1 (Predictive)	<0.5	<1.5
2 (Predictive)	<5	<25
3 (Predictive)	<50	<250
4 (Best Effort)	Unspecified	-

with SDU size = 1024 octets:

Delay Class	Mean Transfer Delay	95 percentile
1 (Predictive)	<0.5	<1.5
2 (Predictive)	<5	<25
3 (Predictive)	<50	<250
4 (Best Effort)	Unspecified	-

`<reliability>`(num)

Reliability class

[0]	network subscribed value
1	Non real-time traffic, error-sensitive application that cannot cope with data loss
2	Non real-time traffic, error-sensitive application that can cope with infrequent data loss
3	Non real-time traffic, error-sensitive application that can cope with data loss, GMM/SM, and SMS

4	Real-time traffic, error-sensitive application that can cope with data loss
5	Real-time traffic, error non-sensitive application that can cope with data loss

`<peak>`(num)

Peak throughput class
in octets per second

[0]	network subscribed value
1	Up to 1 000 (8 kbit/s)
2	Up to 2 000 (16 kbit/s)
3	Up to 4 000 (32 kbit/s)
4	Up to 8 000 (64 kbit/s)
5	Up to 16 000 (128 kbit/s)
6	Up to 32 000 (256 kbit/s)
7	Up to 64 000 (512 kbit/s)
8	Up to 128 000 (1024 kbit/s)
9	Up to 256 000 (2048 kbit/s)

`<mean>`(num)

Mean throughput class
in octets per hour

[0]	network subscribed value
1	100 (~0.22 bit/s)
2	200 (~0.44 bit/s)
3	500 (~1.11 bit/s)
4	1 000 (~2.2 bit/s)
5	2 000 (~4.4 bit/s)
6	5 000 (~11.1 bit/s)
7	10 000 (~22 bit/s)
8	20 000 (~44 bit/s)
9	50 000 (~111 bit/s)
10	100 000 (~0.22 kbit/s)
11	200 000(~0.44 kbit/s)
12	500 000(~1.11 kbit/s)
13	1 000 000 (~2.2 kbit/s)
14	2 000 000 (~4.4 kbit/s)
15	5 000 000 (~11.1 kbit/s)
16	10 000 000 (~22 kbit/s)
17	20 000 000 (~44 kbit/s)
18	50 000 000 (~111 kbit/s)
31	best effort

`<PDP_type>`(str)

Packet Data Protocol type
“IP“

Notes

- If parameters are not defined, the parameter default values depend on the HLR-stored subscribed default values.
- Definitions of parameters in GSM 02.60 and GSM 03.60 paragraph 15.2 "Quality of Service Profile".

Example

If some of the QoS parameters are omitted, they will keep their current value (or the default value if not specified so far), e.g.:

```
AT+CGDCONT=1,"IP"
OK
AT+CGQREQ=
OK
AT+CGQREQ?
+CGQREQ:1,0,0,0,0,0
OK
AT+CGQREQ=1,0
OK
AT+CGQMIN?
+CGQREQ:1,0,0,0,0,0
OK
AT+CGQREQ=1,0,0,0,1
OK
AT+CGQREQ?
+CGQREQ:1,0,0,0,1,0
OK
AT+CGQREQ=1,1
OK
AT+CGQREQ?
+CGQREQ:1,1,0,0,1,0
OK
```

11.12 AT+CGREG GPRS Network Registration Status

AT+CGREG write command enables presentation of URC "+CGREG: <stat>" when <n>=1 and ME's GPRS network registration status changes, or URC "+CGREG: <stat>, <lac>, <ci>" when <n>=2 and the current network cell changes.
AT+CGREG read command queries the current URC presentation status and <stat> which shows whether the network has currently indicated the registration of the ME. Location information elements <lac> and <ci> are returned only if <n>=2 and ME is registered to the network.

Syntax

Test Command

```
AT+CGREG=?
```

Response(s)

```
+CGREG: (list of supported <n>s)
OK
```

Read Command

```
AT+CGREG?
```

Response(s)

```
+CGREG: <n>, <stat>[, <lac>, <ci>]
OK
```

Write Command

```
AT+CGREG=[<n>]
```

Response(s)

```
OK
ERROR
+CME ERROR: <err>
```

PIN	ASC0	ASC1	USB	MUX1	MUX2	MUX3	Charge	✈	Last
+	+	+	+	+	+	+	-	+	-

Reference(s)

GSM 07.07

Unsolicited Result Codes

URC 1

```
+CGREG: <stat>
```

Indicates a change in the ME's GPRS network registration status.

URC 2

```
+CGREG: <stat>, <lac>, <ci>
```

Indicates a change in the ME's GPRS network registration status or a change of the network cell including location information.

Parameter Description

<n>(num)	
0(&F)(P)	Disable network registration unsolicited result code
1	Enable network registration URC "+CGREG: <stat>"
2	Enable network registration URC "+CGREG: <stat>, <lac>, <ci>"

<stat>(num)	
0	Not registered, ME is not currently searching an operator to register to. The ME is in GMM state GMM-NULL or GMM-DEREGISTERED-INITIATED. GPRS service is disabled, the ME is allowed to attach to GPRS if requested by the user.
1	Registered, home network. The ME is in GMM state GMM-REGISTERED or GMM-ROUTING-AREA-UPDATING-INITIATED INITIATED on the home PLMN
2	Not registered, but ME is currently trying to attach or searching an operator to register to. The ME is in GMM state GMM-DEREGISTERED or GMM-REGISTERED-INITIATED. The GPRS service is enabled, but an allowable PLMN is currently not available. The ME will start a GPRS attach as soon as an allowable PLMN is available.
3	Registration denied. The ME is in GMM state GMM-NULL. The GPRS service is disabled, the ME is not allowed to attach to GPRS if requested by the user.
4	Unknown
5	Registered, roaming. The ME is in GMM state GMM-REGISTERED or GMM-ROUTING-AREA-UPDATING-INITIATED on a visited PLMN.

<lac>(str)

Two byte location area code in hexadecimal format.

<ci>(str)

Two byte cell ID in hexadecimal format.

Note

- When the module is GPRS attached and a PLMN reselection occurs to a non-GPRS network or to a network where the SIM is not subscribed to for using GPRS, the resulting GMM (GPRS mobility management) state according to GSM 24.008 is REGISTERED/NO CELL, meaning that the read command will still show <stat>=1 or <stat>=5.

11.13 AT+CGSMS Select service for MO SMS messages

Syntax

Test Command
AT+CGSMS=?
Response(s)
+CGSMS: (list of supported <service>s) OK

Read Command
AT+CGSMS?
Response(s)
+CGSMS: <service> OK

Write Command
AT+CGSMS=[<service>]
Response(s)
OK ERROR +CME ERROR: <err>

PIN	ASC0	ASC1	USB	MUX1	MUX2	MUX3	Charge	✈	Last
+	+	+	+	+	+	+	-	+	-

Reference(s)
GSM 07.07

Command Description

The test command is used for requesting information on which services and service preferences can be set by using the AT+CGSMS write command

The read command returns the currently selected service or service preference.

The write command is used to specify the service or service preference that the MT will use to send MO SMS messages. If parameter <service> is not given, the current value remains unchanged.

Parameter Description

<service>(num)

A numeric parameter which indicates the service or service preference to be used. Parameter is global for all interfaces and volatile.

0	GPRS
1	Circuit switched
2	GPRS preferred (use circuit switched SMS transfer if GPRS SMS transfer is not possible, for example when the mobile is not GPRS attached or the network does not support SMS over GPRS)
3(&F)(P)	Circuit switched preferred (use GPRS if circuit switched is not available)

Note

- Sending SMS via GPRS is only possible when mobile is attached using AT+CGATT.

11.14 AT^SGACT Query all PDP context activations

Syntax

Test Command

```
AT^SGACT=?
```

Response(s)

```
^SGACT: (range of supported <ifc>s) , (range of supported <state>s)
OK
```

Read Command

```
AT^SGACT?
```

Response(s)

```
[^SGACT: <ifc>, <cid>, <state>]
[^SGACT: <ifc>, <cid>, <state>]
[^SGACT: ...]
OK
```

Exec Command

```
AT^SGACT
```

Response(s)

```
^SGACT: <sum>
OK
```

PIN	ASC0	ASC1	USB	MUX1	MUX2	MUX3	Charge	✈	Last
+	+	+	+	+	+	+	-	+	-

Command Description

The test command returns supported interfaces and states.

The read command lists the activation states for all activated PDP contexts of the ME. Contexts, which are created internally by the GPRS modem compatibility commands, will displayed only, if they are activated. The Output of this command is unsorted.

The exec command returns the sum of all activated PDP contexts of the ME.

Parameter Description

<ifc>(num)

Interface

Indicates the interface on which a particular PDP context was defined. Every PDP context defined with the command AT+CGDCONT or internally by the GPRS modem compatibility commands is identified one-to-one by its (local) context identifier and the interface on which it was defined. The range of supported interfaces is returned by the test command.

0	ASC0 or Multiplex channel 1
1	ASC1 or Multiplex channel 2
2	USB or Multiplex channel 3

<cid>(num)

PDP context identifier

The interface local identifier which was used to define a PDP context using the command AT+CGDCONT or which was created internally by using the GPRS modem compatibility commands ATD*98# or ATD*99#. The range of supported values is returned by the AT+CGDCONT test command. Values 3 and 4 will be used by the GPRS modem compatibility commands ATD*98# or ATD*99# if no context identifier was specified as the command was invoked.

<state>(num)

PDP context activation state

Indicates the state of the PDP context activation.

0	Deactivated
1	Activated

<sum>(num)

The sum of all activated PDP contexts of the ME.

11.15 AT^SGAUTH Set type of authentication for PPP connection

Syntax

Test Command

```
AT^SGAUTH=?
```

Response(s)

```
^SGAUTH: (list of supported <auth>s)
OK
ERROR
+CME ERROR: <err>
```

Read Command

```
AT^SGAUTH?
```

Response(s)

```
^SGAUTH: <auth>
OK
ERROR
+CME ERROR: <err>
```

Write Command

```
AT^SGAUTH=<auth>
```

Response(s)

```
OK
ERROR
+CME ERROR: <err>
```

PIN	ASC0	ASC1	USB	MUX1	MUX2	MUX3	Charge	✈	Last
-	+	+	+	+	+	+	-	+	-

Parameter Description

<auth>(num)

Indicates types of supported authentication.

0	none
1(&F)(P)	PAP
2	CHAP
3	MS-CHAP-V1, CHAP and PAP

11.16 AT^SGCONF Configuration of GPRS related Parameters

Syntax

Test Command

AT^SGCONF=?

Response(s)

^SGCONF: (list of supported <llc_pdu_length_U>s), (list of supported <llc_pdu_length_I>s), (list of supported <GPRS msclass>es)
OK

Read Command

AT^SGCONF?

Response(s)

^SGCONF: <llc_pdu_length_U>, <llc_pdu_length_I>, <GPRS msclass>
OK

Write Command

AT^SGCONF=[<llc_pdu_length_U>][, [<llc_pdu_length_I>][, [<GPRS msclass>]]]

Response(s)

OK
ERROR
+CME ERROR: <err>

PIN	ASC0	ASC1	USB	MUX1	MUX2	MUX3	Charge	✈	Last
-	+	+	+	+	+	+	-	+	-

Parameter Description

<llc_pdu_length_U>(num)

The maximum number of octets in an information field of Unnumbered (U) frames. Parameter is non-volatile.

0	No negotiation with network (500 will be used).
140...500(D)...1520	Lower values diminish performance.

<llc_pdu_length_I>(num)

The maximum number of octets in an information field of Combined Information (I) frames. Parameter is non-volatile.

0	No negotiation with network (500 will be used).
140...500(D)...1520	Lower values diminish performance.

<GPRS msclass>(num)

GPRS Multislot Class. The value can be one of the classes indicated with the Test command. The value set is volatile and powerup value is the maximum allowed.

Note

- AT^SGCONF will respond with "+CME ERROR: operation temporary not allowed" if the module is already GPRS attached (see AT+CGATT). The same error response is sent during background protocol stack activity, e.g. during network registration.

11.17 ATA Manual response to a network request for PDP context activation

The V.250 ATA command may be used to accept a network request for a PDP context activation announced by the unsolicited result codes "RING" or "+CRING: GPRS". The MT responds with CONNECT, enters V.250 online data state and follows the same procedure as it would after having received a AT+CGANS=1 with no <L2P> or <cid> values specified.
If you try to answer a request which is no longer present or which is already answered by another instance, NO CARRIER is returned.

Syntax

Exec Command
ATA
Response(s)
CONNECT NO CARRIER

PIN	ASC0	ASC1	USB	MUX1	MUX2	MUX3	Charge	✈	Last
+	+	+	+	+	+	+	-	-	+

Reference(s)
GSM 07.07

11.18 ATD*99# Request GPRS service

This command causes the MT to perform whatever actions are necessary to establish a communication between the TE and the external PDN.
The V.250 'D' (Dial) command causes the MT to enter the V.250 online data state and, with the TE, to start the specified layer 2 protocol. No further commands may follow on the AT command line. GPRS attachment and PDP context activation procedures may take place prior to or during the PDP startup if they have not already been performed using the AT+CGATT and AT+CGACT commands.
Examples on how to use this command are provided in "Section 11.22, Using GPRS AT commands (Examples)".
To confirm acceptance of the command before entering the V.250 online data state command will respond with CONNECT.
When the layer 2 protocol has terminated, either as a result of an orderly shut down of the PDP or an error, the MT enters V.250 command state and returns NO CARRIER (for details refer to Section 11.5.1, Automatic deactivation of PDP context during dial-up PPP).

Syntax

Exec Command

```
ATD*99[* [<called_address>][* [<L2P>][* [<cid>]]]]#
```

Response(s)

```
CONNECT
NO CARRIER
```

PIN	ASC0	ASC1	USB	MUX1	MUX2	MUX3	Charge	✈	Last
+	+	+	+	+	+	+	-	-	+

Reference(s)

GSM 07.07

Parameter Description

<called_address>(str)

This parameter is currently not used and needs not to be specified.

<L2P>(str)

Layer 2 protocol to be used between the TE and MT.

“PPP“	layer 2 protocol PPP
“1“	layer 2 protocol PPP

<cid>(num)

Parameter specifies a particular PDP context definition (see AT+CGDCONT command). If no context is specified, an internal context with default properties is used (see AT+CGDCONT, AT+CGQREQ and AT+CGQMIN).

1...2

Notes

- If TC65i is in dedicated mode, command returns the result code BUSY.
- ATD is used as a standard V.250 AT command, too.
- When using the command on the second serial interface please see also Section 1.9.

11.19 ATD*98# Request GPRS IP service

This command causes the MT to perform whatever actions are necessary to establish a communication between the TE and the external PDN.
The V.250 'D' (Dial) command causes the MT to enter the V.250 online data state and, with the TE, to start the layer 2 protocol.
GPRS attachment and PDP context activation procedures may take place prior to or during the PDP startup if they have not already been performed using the AT+CGATT and AT+CGACT commands.
To confirm acceptance of the command before entering the V.250 online data state command will respond with CONNECT.
When the layer 2 protocol has terminated, either as a result of an orderly shut down of the PDP or an error, the MT enters V.250 command state and returns NO CARRIER (for details refer to Section 11.5.1, Automatic deactivation of PDP context during dial-up PPP).

Syntax

Exec Command

```
ATD*98[* <cid>]#
```

Response(s)

```
CONNECT
NO CARRIER
```

PIN	ASC0	ASC1	USB	MUX1	MUX2	MUX3	Charge	✈	Last
+	+	+	+	+	+	+	-	-	+

Reference(s)

GSM 07.07

Parameter Description

`<cid>`(num)

Parameter specifies a particular PDP context definition (see AT+CGDCONT command). If no context is specified, an internal context with default properties is used (see AT+CGDCONT, AT+CGQREQ and AT+CGQMIN).

1...2

Notes

- If TC65i is in dedicated mode, command returns the result code BUSY.
- ATD is used as a standard V.250 AT command, too.
- When using the command on the second serial interface please see also Section 1.9.

11.20 ATH Manual rejection of a network request for PDP context activation

The V.250 ATH command may be used to deactivate all PDP contexts which are active or online on the same interface. This command should not be used to deactivate PDP contexts during the implicit PDP context deactivation procedure which is started automatically after LCP termination or by dropping the DTR line (if AT&D2 is configured). For details refer to Section 11.5.1, Automatic deactivation of PDP context during dial-up PPP.
The ATH command may also be used to reject a network request for PDP context activation announced by the unsolicited result codes "RING: GPRS" or "+CRING: GPRS".

Syntax

Exec Command
ATH
Response(s)
OK

PIN	ASC0	ASC1	USB	MUX1	MUX2	MUX3	Charge	✈	Last
+	+	±	+	+	±	±	-	-	-

Reference(s)
GSM 07.07

Notes

- In contrast to GSM 07.07 it is possible to cancel a connection with ATH after a break. This is done for compatibility reasons due to the "dial-up network" drivers of Microsoft Windows.
- ATH is used as a standard V.250 AT command, too.
- If ATH is used to reject a network request for PDP context activation, then other PDP contexts on the same interface which are active or online will not be deactivated.

11.21 ATS0 Automatic response to a network request for PDP context activation

The V.250 ATS0=<n> (Automatic answer) command may be used to turn off (n=0) and on (n>0) the automatic response to a network request for a PDP context activation. See also "3GPP TS 27.007 (GSM 07.07): AT command set for User Equipment (UE)".
When the ATS0=<n> (<n> > 0) command is received, the MT will attempt to perform a GPRS attach if not yet attached and if configured to do so (see AT^SCFG, parameter <gs0aa>). Subsequently, the MT will announce a network request for PDP context activation by issuing the URC RING or CRING to the TE, followed by the intermediate result code CONNECT. The MT then enters V.250 online data state and follows the same procedure as it would after receiving a AT+CGANS=1 command with no <L2P> or <cid> values specified.
ATS0=0 does not perform an automatic GPRS detach.

Syntax

Read Command

```
ATS0?
```

Response(s)

```
<n>
OK
```

Write Command

```
ATS0=<n>
```

Response(s)

```
OK
```

PIN	ASC0	ASC1	USB	MUX1	MUX2	MUX3	Charge	✈	Last
±	+	+	+	+	+	+	-	-	-

Reference(s): GSM 07.07

Parameter Description

<n>(num)(&W)(&V)	
000(&F)	Disables automatic answer mode.
001-255	Enables automatic answering after specified number of rings.

Notes

- If different settings are used on each interface, and a request for PDP context activation is received, the interface 'wins' which is idle and uses the smallest ATS0 value.
- When a network request for PDP context activation is answered automatically and another AT command is issued at the same time on the same interface then this AT command will not be executed. Any response relates to the automatic context activation procedure. If the AT command which caused the collision was a CS data call, the CONNECT response does not pertain to this data call but to GPRS. This can be detected if ATX is not set to 0. The CS data call will issue CONNECT <text>, GPRS will issue CONNECT only.
- A network request for PDP context activation has a maximum duration of approximately 40 seconds (for details see GSM 04.08). A RING/CRING URC is issued every 5 seconds, so setting parameter <n> to values greater than 7 will not allow a successful context activation and is not recommended.
- Automatic GPRS attach will not be performed on recalling a stored user profile with ATZ or on power-up, even though a value <n> greater than 0 was stored in the user profile with AT&W.
- If AT^SCFG="GPRS/ATS0/withAttach","on" is selected, but the automatic GPRS attach attempt fails (e.g. the network rejects the attach request), the ATS0 write command ends up with "ERROR" or "+CME ERROR: unknown" after approx. 5 minutes, though the new <n> value takes effect. This is necessary because ATS0 is used for circuit switched calls too.
- ATS0 write command is PIN protected.

11.22 Using GPRS AT commands (Examples)

Examples

EXAMPLE 1

Defining and using a Context Definition ID (CID):
Every time a CID is used as a parameter for a GPRS command the CID has to be defined before by using the AT+CGDCONT command. To get the parameter of a CID use the AT+CGDCONT read option. If the response of 'AT+CGDCONT?' is OK only, there is no CID defined.

```
AT+CGDCONT?
OK                                                    There is no CID defined
```

All parameters of the CID are initiated by NULL or not present values, and the CID itself is set to be undefined. To define a CID use the AT+CGDCONT command with at least one CID parameter. At the moment the mobile supports CID 1 and CID 2 by using the AT+CGDCONT command.

Define CID 1 and set the PDP type to IP, access point name and IP address are not set:

```
AT+CGDCONT=1,"IP"
OK
```

Define CID 2 and sets PDP type, APN and IP addr:

```
AT+CGDCONT=2,"IP", "internet.t-d1.gprs", 111.222.123.234
OK
```

A following read command will respond:

```
AT+CGDCONT?
+CGDCONT:1,"IP","","",0,0
+CGDCONT:2,"IP","internet.t-d1.gprs",111.222.123.234
OK
```

Set the CID 1 to be undefined:

```
AT+CGDCONT=1
OK
```

A following read command will respond:

```
AT+CGDCONT?
+CGDCONT:2,"IP","internet.t-d1.gprs",111.222.123.234
OK
```

EXAMPLE 2

Quality of Service (QoS) is a special parameter of a CID which consists of several parameters itself.
The QoS consists of
- the precedence class
- the delay class
- the reliability class
- the peak throughput class
- the mean throughput class
and is divided in "requested QoS" and "minimum acceptable QoS".

All parameters of the QoS are initiated by default to the "network subscribed value (= 0)" but the QoS itself is set to be undefined. To define a QoS use the AT+CGQREQ or AT+CGQMIN command.

Overwrite the precedence class of QoS of CID 1 and set the QoS of CID 1 to be present:

```
AT+CGQREQ=1,2
OK
```

A following read command will respond:

```
AT+CGQREQ?
+CGQREQ: 1,2,0,0,0,0
OK
```

All QoS values of CID 1 are set to network subscribed now, except precedence class which is set to 2. Now set the QoS of CID 1 to not present:

```
AT+CGQREQ=1
OK
```

Once defined, the CID it can be activated. To activate CID 2 use:

```
AT+CGACT=1,2
OK
```

If the CID is already active, the mobile responds OK at once.
If no CID and no STATE is given, all defined CIDs will be activated by:

```
AT+CGACT=
OK
```

If no CID is defined the mobile responds +CME ERROR: invalid index
Remark: If the mobile is NOT attached by AT+CGATT=1 before activating, the attach is automatically done by the AT+CGACT command.

After defining and activating a CID it may be used to get online by:

`AT+CGDATA="PPP",1` `CONNECT`	The mobile is connected using the parameters of CID 1.
`AT+CGDATA=` `CONNECT`	The mobile is connected using default parameters (<L2P>="PPP" and <cid> as described for command AT+CGDATA).

The mobile supports Layer 2 Protocol (L2P) PPP only.
Remark: If the mobile is NOT attached by AT+CGATT=1 and the CID is NOT activated before connecting, attaching and activating is automatically done by the AT+CGDATA command.

11.23 Using the GPRS dial command ATD

Example

In addition to the GPRS AT commands you can use the "D" command to dial into to the GPRS network.

There are two GPRS Service Codes for the ATD command: Values 98 and 99.
Examples:

`ATD*99#` `CONNECT`	Establish a connection by service code 99.
`ATD*99*123.124.125.126*PPP*1#` `CONNECT`	Establish a connection by service code 99, IP address 123 and L2P = PPP and using CID 1. The CID has to be defined by `AT+CGDCONT`.
`ATD*99**PPP#` `CONNECT`	Establish a connection by service code 99 and L2P = PPP.
`ATD*99***1#` `CONNECT`	Establish a connection by service code 99 and using CID 1.
`ATD*99**PPP*1#` `CONNECT`	Establish a connection by service code 99 and L2P = PPP and using CID 1. The CID has to be defined by `AT+CGDCONT`.
`ATD*98#` `CONNECT`	Establish a connection by service code 98.
`ATD*98*1#` `CONNECT`	Establish an IP connection by service code 98 using CID 1. The CID has to be defined by `AT+CGDCONT`.

12. FAX Commands

This chapter describes the AT commands used for fax communications. Please note that fax related commands are not supported by Java.
If the ME is acting as a fax modem for a PC based fax application (e.g. "WinFax") it is necessary to select the proper Service Class (Fax Class) provided by the ME. The ME reports its Service Class capabilities, i.e. the current setting and the range of services available. This is provided by the AT+FCLASS command.

Service Classes supported by the ME:

AT+FCLASS Parameter	Service class	Reference, Standard
0	Data modem	e.g. TIA/EIA-602 or ITU V.250
1	Service Class 1	EIA/TIA-578-A

During an active fax connection the AT parser functionality on the used channel is limited to the AT commands which according to the ITU V.250 and T.31 specifications are mandatory for fax communications. The functions of these AT commands are usually supported by commonly used fax applications.

12.1 FAX parameters

This section describes the parameter <mod> used by some of the fax-specific AT commands. To find out the value(s) actually supported by the <mod> parameter use the test commands either in on-hook or off-hook mode.

Parameter Description

<mod>(num)	
Modulation scheme	
3	V21 Ch2 - 300 bps
24	V.27ter - 2400 bps
48	V.27ter - 4800 bps
72	V.29 - 7200 bps
96	V.29 - 9600 bps

Note

- For AT+FRH and AT+FTH, parameter <mod> can take value 3 only, while AT+FRM and AT+FTM never support <mod>=3.

12.1.1 Fax Result Codes

Table 12.1: Fax Result Codes

Result Code	Meaning
+FCERROR	This facsimile error message notifies the DTE that the DCE has received a different signal (tone or carrier) than expected. This allows the DTE to recover by requesting the DCE to look for an alternative tone or carrier signal.

12.2 AT+FCLASS Fax: Select, read or test service class

AT+FCLASS sets the ME to a particular mode of operation (data, fax). This allows the ME to process information in a manner suitable for that type of information.

Syntax

Test Command
AT+FCLASS=?
Response(s)
(list of supported <n>s) OK

Read Command
AT+FCLASS?
Response(s)
<n> OK

Write Command
AT+FCLASS=<n>
Response(s)
OK

PIN	ASC0	ASC1	USB	MUX1	MUX2	MUX3	Charge	✈	Last
-	+	-	+	+	-	-	-	+	-

Reference(s)
EIA/TIA-592-A

Parameter Description

<n>(num)(&W)(&V)	
0(&F)	Data (e.g. EIA/TIA-602 or ITU V.250)
1	Fax class 1 (EIA/TIA-578-A, Service Class 1)

Notes

- Using Error Correcting Mode (ECM) when sending FAXes over GSM should be avoided.
- If <n> is set to 1, all incoming calls will be answered as fax calls when ATA is issued on multiplexer channel 1 resp. ASC0. For calls explicitly signaled as voice or data calls, this procedure will fail with result code "NO CARRIER", but the incoming call will continue to ring.
  It is possible to change the setting of <n> to 0 while the call is ringing, and accept the call afterwards with ATA.

12.3 AT+FRH Receive Data Using HDLC Framing

The AT+FRH command enables the TA to receive frames using the HDLC protocol and the modulation scheme <mod>=3.

An ERROR response code results if the write command is issued while the modem is on-hook. The test command can be used either in on-hook or off-hook mode to check the value supported by the <mod> parameter.

Syntax

Test Command

AT+FRH=?

Response(s)

+FRH: (list of <mod>s)
OK

Write Command

AT+FRH=<mod>

Response(s)

CONNECT
If error is related to ME functionality
ERROR

PIN	ASC0	ASC1	USB	MUX1	MUX2	MUX3	Charge	✈	Last
-	+	-	+	+	-	-	-	-	-

Reference(s)

TIA/EIA-578

Note

- TC65i supports only <mod>=3.

12.4 AT+FRM Receive Data

The AT+FRM command causes the TA to enter the receive mode, using one of the modulation schemes defined in Section 12.1, FAX parameters.

An ERROR response code results if the write command is issued while the modem is on-hook. The test command can be used in on-hook or off-hook mode to check the modulation schemes supported by TC65i.

Syntax

Test Command

AT+FRM=?

Response(s)

(list of <mod>s)
OK

Write Command

AT+FRM=<mod>

Response(s)

CONNECT
If error is related to ME functionality:
ERROR

PIN	ASC0	ASC1	USB	MUX1	MUX2	MUX3	Charge	✈	Last
-	+	-	+	+	-	-	-	-	-

Reference(s)

TIA/EIA-578

Note

- <mod>= 3 is not possible.

12.5 AT+FRS Receive Silence

<time>=n causes the TA to report an OK result code to the TE after the specified period of silence was detected on the line.
The command is aborted if any character is received by the TE. The modem discards the aborting character and issues an OK result code. An ERROR response code results if this command is issued while the mode is on-hook.

Syntax

Write Command

AT+FRS=<time>

Response(s)

OK

If error is related to ME functionality:

ERROR

PIN	ASC0	ASC1	USB	MUX1	MUX2	MUX3	Charge	✈	Last
-	+	-	+	+	-	-	-	-	-

Reference(s)

TIA/EIA-578

Parameter Description

<time>(num)

Number of 10 millisecond intervals

0...255

12.6 AT+FTH Transmit Data Using HDLC Framing

The AT+FTH command causes the TA to transmit data using the HDLC protocol and the modulation scheme <mod>=3.

An ERROR response code results if the write command is issued while the modem is on-hook. The test command can be used either in on-hook or off-hook mode to check the value supported by the <mod> parameter.

Syntax

Test Command

AT+FTH=?

Response(s)

+FTH: (list of <mod>s)
OK

Write Command

AT+FTH=<mod>

Response(s)

CONNECT

PIN	ASC0	ASC1	USB	MUX1	MUX2	MUX3	Charge	✈	Last
-	+	-	+	+	-	-	-	-	-

Reference(s)

TIA/EIA-578

Note

- TC65i supports only <mod>=3.

12.7 AT+FTM Transmit Data

The AT+FTM command causes the TA to transmit data, using one of the modulation schemes defined in Section 12.1, FAX parameters.

An ERROR response code results if the write command is issued while the modem is on-hook. The test command can be used in on-hook or off-hook mode to check the modulation schemes supported by TC65i.

Syntax

Test Command

AT+FTM=?

Response(s)

(list of <mod>s)
OK

Write Command

AT+FTM=<mod>

Response(s)

CONNECT
If error is related to ME functionality:
ERROR

PIN	ASC0	ASC1	USB	MUX1	MUX2	MUX3	Charge	✈	Last
-	+	-	+	+	-	-	-	-	-

Reference(s)

TIA/EIA-578

Note

- <mod>= 3 is not possible

12.8 AT+FTS Stop Transmission and Wait

This command causes the TA to terminate a transmission and wait for <time> 10 millisecond intervals before sending the OK result code to the TE.

Syntax

Write Command

AT+FTS=<time>

Response(s)

OK

In on-hook mode:

ERROR

PIN	ASC0	ASC1	USB	MUX1	MUX2	MUX3	Charge	✈	Last
-	+	-	+	+	-	-	-	-	-

Reference(s)

TIA/EIA-578

Parameter Description

<time>(num)

no. of 10 millisecond intervals

0...85

13. Short Message Service (SMS) Commands

The AT Commands described in this chapter allow an external application to use the Short Message Service with the TC65i.

13.1 SMS parameters

Parameter Description

<ackpdu>(num)

Format is same for <pdu> in case of SMS, but without GSM 24.11 SC address field and parameter shall be bounded by double quote characters like a normal string type parameter

<alpha>(str)(+CSCS)

String type alphanumeric representation of <da> or <oa> corresponding to the entry found in phonebook; this feature is not supported

<cdata>(num)

Command Data

GSM 03.40 TP-Command-Data in text mode responses; ME/TA converts each 8-bit octet into two IRA character long hexadecimal numbers (e.g. octet with integer value 42 is presented to TE as two characters 2A (IRA 50 and 65))

<ct>(num)

Command Type

GSM 03.40 TP-Command-Type in integer format

[0]...255

<da>(num)(+CSCS)

Destination Address

GSM 03.40 TP- Destination-Address Address-Value field in string format; BCD numbers (or GSM default alphabet characters) are converted into characters; type of address given by <toda>

<data>(num)(+CSCS)

User Data

In case of SMS: GSM 03.40 TP-User-Data in text mode responses; format:

- If <dcs> indicates that GSM 03.38 default alphabet is used and <fo> indicates that GSM 03.40 TP-User-Data-Header-Indication is not set: ME/TA converts GSM alphabet into current TE character set according to rules covered in Annex A.
- If <dcs> indicates that 8-bit or UCS2 data coding scheme is used, or <fo> indicates that GSM 03.40 TP-User-Data-Header-Indication is set: ME/TA converts each 8-bit octet into hexadecimal numbers con-taining two IRA characters (e.g. octet with integer value 42 is presented to TE as two characters 2A (IRA 50 and 65).

In case of CBS: GSM 03.41 CBM Content of Message in text mode responses; format:

- If <dcs> indicates that GSM 03.38 default alphabet is used: ME/TA converts GSM alphabet into current TE character set according to rules covered in Annex A.
- If <dcs> indicates that 8-bit or UCS2 data coding scheme is used: ME/TA converts each 8-bit octet into hexadecimal numbers containing two IRA characters.

`<dt>`(num)

Discharge Time

GSM 03.40 TP-Discharge-Time in time-string format: "yy/MM/dd,hh:mm:ss+zz", where characters indicate year (two last digits), month, day, hour, minutes, seconds and time zone. For example, 6th of May 1994, 22:10:00 GMT+2 hours equals "94/05/06,22:10:00+08"

`<ieia>`(num)

IEIa (Information Element Identifier octet) of the concatenated SMS.

8	Concatenated short messages, 8-bit reference number
16	Concatenated short messages, 16-bit reference number

`<index>`(num)

Integer type; value in the range of location numbers supported by the associated memory

`<length>`(num)

Message Length

Integer type value indicating in the text mode (`AT+CMGF`=1) the length of the message body `<data>` (or `<cdata>`) in characters; or in PDU mode (`AT+CMGF`=0), the length of the actual TP data unit in octets (i.e. the RP layer SMSC address octets are not counted in the length) In text mode, the maximum length of an SMS depends on the used coding scheme: It is 160 characters if the 7 bit GSM coding scheme is used, and 140 characters according to the 8 bit GSM coding scheme.
If the SMS message format is "text mode" (`AT+CMGF`=1) and the character set is set to "UCS2" with `AT+CSCS` and the SMS is also coded as "UCS2" (see `<dcs>` of `AT+CSMP`), then the length is in octets instead of characters.
For concatenated SMS messages the maximum length will be reduced by the length of the user data header with respect to `<ieia>` (6 bytes for `<ieia>`=8 and 7 bytes for `<ieia>`=16). In the case of 8-bit data, the maximum length of the short message field is: 140 octets - (6 or 7) = 134 or 133. In the case of GSM 7 bit default alphabet data, the maximum length of the short message is (140 - (6 or 7))*8/7 = 153 or 152 characters. In the case of 16 bit UC2 data, the maximum length of the short message is: (140 - (6 or 7))/2)= 67 or 66 characters.

`<max>`(num)

Maximum number of all segments to be concatenated into one SMS, beginning with 1.
`<max>`=0 means: ignore the value. This will result in a non-concatenated SMS.

0...255

`<mem1>`(str)

Memory to be used when listing, reading and deleting messages:

“SM“	SIM message storage
“ME“	Mobile Equipment message storage
“MT“(D)	Sum of "SM" and "ME" storages

`<mem2>`(str)

Memory to be used when writing and sending messages:

“SM“	SIM message storage
“ME“	Mobile Equipment message storage
“MT“(D)	Sum of "SM" and "ME" storages

<mem3>(str)

Received messages will be placed in this memory storage if routing to TE is not set. See command AT+CNMI with parameter <mt>=2.

“SM“	SIM message storage
“MT“(D)	Sum of "SM" and "ME" storages

<mid>(num)

Message Identifier

GSM 03.41 CBM Message Identifier in integer format

<mn>(num)

Message Number

GSM 03.40 TP-Message-Number in integer format

<mr>(num)

Message Reference

GSM 03.40 TP-Message-Reference in integer format

<oa>(num)(+CSCS)

Originating Address

GSM 03.40 TP-Originating-Address Address-Value field in string format; BCD numbers (or GSM default alphabet characters) are converted into characters; type of address given by <tooa>

<page>(num)

Page Parameter

GSM 03.41 CBM Page Parameter bits 4-7 in integer format

<pages>(num)

Page Parameter

GSM 03.41 CBM Page Parameter bits 0-3 in integer format

<pdu>(num)

In the case of SMS: GSM 04.11 SC address followed by GSM 03.40 TPDU in hexadecimal format: ME/TA converts each octet of TP data unit into hexadecimal numbers containing two IRA characters (e.g. octet with integer value 42 is presented to TE as two characters 2A (IRA 50 and 65)). In the case of CBS: <ra> GSM 03.40 TP-Recipient-Address Ad-dress-Value field in string format; BCD numbers (or GSM default alphabet characters) are converted into characters; type of address given by <tora>

<ra>(num)(+CSCS)

Recipient Address

GSM 03.40 TP-Recipient-Address Address-Value field in string format; BCD numbers (or GSM default alphabet characters) are converted to characters of the currently selected TE character set (refer to command AT+CSCS.); type of address given by <tora>

`<ref>`(num)

Reference number to identify all segments of the concatenated SMS (i.e. the number needs to be the same for each segment). If `<ieia>`=8 then max=255, otherwise 65535.

0...255

0...65535

`<sca>`(num)(+CSCS)

Service Center Address

GSM 04.11 RP SC address Address-Value field in string format; BCD numbers (or GSM default alphabet characters) are converted to characters of the currently selected TE character set (refer to command `AT+CSCS`); type of address given by `<tosca>`

`<scts>`(num)

Service Centre Time Stamp

GSM 03.40 TP-Service-Centre-Time-Stamp in time-string format (refer `<dt>`)

`<seq>`(num)

Sequence number of the concatenated SMS beginning with 1. The number must be incremented by one for each segment of the concatenated short message.
`<seq>`=0 means: ignore the value. This will result in a non-concatenated SMS.

0...255

`<sn>`(num)

Serial Number

GSM 03.41 CBM Serial Number in integer format

`<st>`(num)

Status

GSM 03.40 TP-Status in integer format

0...255

`<stat>`(str)

Message status

3GPP 27.005 Interface of SMS and CB. Indicates the status of message in memory.

Description	text mode (`<mode>`=1)	PDU mode (`<mode>`=0)	Default
Received unread messages	"REC UNREAD"	0	for SMS reading commands
Received read messages	"REC READ"	1	
Stored unsent messages	"STO UNSENT"	2	for SMS writing commands
Stored sent messages	"STO SENT"	3	
All messages	"ALL"	4	

<toda>(num)

Type of Destination Address

GSM 04.11 TP-Destination-Address Type-of-Address octet in integer format (when first character of <da> is + (IRA 43) default is 145, otherwise default is 129)

0...255

<tooa>(num)

Type of Originating Address

GSM 04.11 TP-Originating-Address Type-of-Address octet in integer format (default refer <toda>)

<tora>(num)

Type of Recipient Address

GSM 04.11 TP-Recipient-Address Type-of-Address octet in integer format (default refer <toda>)

<tosca>(num)

Type of Service Center Address

GSM 04.11 RP SC address Type-of-Address octet in integer format (default refer <toda>)

13.2 AT+CMGC Send an SMS command

Syntax

Test Command

AT+CMGC=?

Response(s)

OK

Write Command

If text mode (see AT+CMGF=1)

AT+CMGC=<fo>, <ct>[, <pid>[, <mn>[, <da>[, <toda>]]]]<CR> Text can be entered <CTRL-Z>/<ESC>

Response(s)

+CMGC: <mr>[, <scts>]

If sending fails

ERROR

+CMS ERROR: <err>

Write Command

If PDU mode (see AT+CMGF=0)

AT+CMGC=<length><CR> PDU can be entered <CTRL-Z>/<ESC>

Response(s)

+CMGC: <mr>[, <ackpdu>]

OK

If sending fails

ERROR

+CMS ERROR: <err>

PIN	ASC0	ASC1	USB	MUX1	MUX2	MUX3	Charge	✈	Last
+	+	+	+	+	+	+	-	-	-

Reference(s)

GSM 07.05

Notes

- After invoking the commands AT+CMGW, AT+CMGS or AT+CMGC it is necessary to wait for the prompt ">" before entering text or PDU. After the prompt a timer will be started to observe the input.
- At baudrates below 19200 it is recommended to use the line termination character only (refer to ATS3, default <CR>) before entering the text or PDU. Use of the line termination character followed by the response formatting character (refer to ATS4, default <LF> can cause problems

13.3 AT+CMGD Delete short message

The write command deletes a short message from the preferred message storage <mem1> location <index>.

Syntax

Test Command
AT+CMGD=?
Response(s)
OK

Write Command
AT+CMGD=<index>
Response(s)
OK ERROR +CMS ERROR: <err>

PIN	ASC0	ASC1	USB	MUX1	MUX2	MUX3	Charge	✈	Last
+	+	+	+	+	+	+	-	+	-

Reference(s)
GSM 07.05

Notes

- If there is no short message stored at the selected index, the response is OK too.
- Users should be aware that when using this AT command quickly after SIM PIN authentication the SIM data may not yet be accessible, resulting in a short delay before the requested AT command response is returned. See Section 23.1, Restricted access to SIM data after SIM PIN authentication for further detail.

13.4 AT+CMGF Select SMS message format

Syntax

Test Command
AT+CMGF=?
Response(s)
+CMGF: (list of supported<mode>s) OK

Read Command
AT+CMGF?
Response(s)
+CMGF: <mode> OK

Write Command
AT+CMGF=<mode>
Response(s)
OK

PIN	ASC0	ASC1	USB	MUX1	MUX2	MUX3	Charge	✈	Last
-	+	+	+	+	+	+	-	+	-

Reference(s)
GSM 07.05

Command Description

The write command specifies the input and output format of the short messages.

Parameter Description

<mode>(num)(&W)(&V)	
[0](&F)	PDU mode
1	Text mode

13.5 AT+CMGL List SMS messages from preferred store

The write command returns messages with status value <stat> from message storage <mem1> to the TE. If the status of the message is 'received unread', the status in the storage changes to 'received read'.
The execute command is the same as the write command with the given default for <stat>.

Syntax

Test Command

AT+CMGL=?

Response(s)

+CMGL: (list of supported <stat>s)
OK

Exec Command

AT+CMGL

Response(s)

+CMGL: (see write command for default of <stat>)
OK

Write Command

AT+CMGL=<stat>

Response(s)

Output if text mode (AT+CMGF=1) and command successful:
For SMS- SUBMITs and/or SMS-DELIVERs
+CMGL: <index>, <stat>, <oa>/<da>, [<alpha>], [<scts>][, <tooa>/<toda>, <length>]
<data>
[...]
OK

For SMS-STATUS-REPORTs
+CMGL: <index>, <stat>, <fo>, <mr>, [<ra>], [<tora>], <scts>, <dt>, <st>
[...]
OK

For SMS-Commands
+CMGL: <index>, <stat>, <fo>, <ct>
[...]
OK

Output if PDU mode AT+CMGF=0 and command successful:
For SMS-SUBMITs and/or SMS-DELIVERs
+CMGL: <index>, <stat>, [<alpha>], <length>
<pdu>
[...]
OK

If error is related to ME functionality
ERROR
+CMS ERROR: <err>

PIN	ASC0	ASC1	USB	MUX1	MUX2	MUX3	Charge	✈	Last
+	+	+	+	+	+	+	-	+	-

Reference(s)

GSM 07.05

Notes

- The selected <mem1> can contain different types of SMs (e.g. SMS-DELIVERs, SMS-SUBMITs, SMS-STATUS-REPORTs and SMS-COMMANDs), the response may be a mix of the responses of different SM types. TE application can recognize the response format by examining the third response parameter.
- The parameters <ra> and <tora> will only be displayed if parameter <ra> of the AT^SSCONF command is set to 1.
- Users should be aware that when using this AT command quickly after SIM PIN authentication the SIM data may not yet be accessible, resulting in a short delay before the requested AT command response is returned. See Section 23.1, Restricted access to SIM data after SIM PIN authentication for further detail.
- If the ME is Java controlled, take into account that the AT Command API can handle responses up to a length of 1024 bytes. To avoid any longer reponses it is recommended not to read the entire range of phonebook entries at a time.

13.6 AT+CMGR Read SMS messages

The write command returns SMS message with location value <index> from message storage <mem1> to the TE. If status of the message is 'received unread', status in the storage changes to 'received read'.

Syntax

Test Command

AT+CMGR=?

Response(s)

OK

Write Command

AT+CMGR=<index>

Response(s)

Output if text mode (AT+CMGF=1) and command successful:
For SMS-DELIVER

+CMGR: <stat>, <oa>, [<alpha>], <scts>[, <tooa>, <fo>, <pid>, <dcs>, <sca>, <tosca>, <length>]
<data>
[...]
OK

For SMS-SUBMIT

+CMGR: <stat>, <da>, [<alpha>][, <toda>, <fo>, <pid>, <dcs>, [<vp>], <sca>, <tosca>, <length>]
<data>
[...]
OK

For SMS-STATUS-REPORT

+CMGR: <stat>, <fo>, <mr>, [<ra>], [<tora>], <scts>, <dt>, <st>
<data>
[...]
OK

For SMS-Commands

+CMGR: <stat>, <fo>, <ct>[, <pid>, [<mn>], [<da>], [<toda>], <length>]
<data>
[...]
OK

Output if PDU mode (AT+CMGF=0) and command successful:
For SMS-SUBMITs and/or SMS-DELIVERs

+CMGR: <stat>, [<alpha>], <length>
<pdu>
[...]
OK
ERROR
+CMS ERROR: <err>

PIN	ASC0	ASC1	USB	MUX1	MUX2	MUX3	Charge	✈	Last
+	+	+	+	+	+	+	-	+	-

Reference(s)

GSM 07.05

Notes

- Response if AT+CMGR is used to read an empty record index: +CMGR: 0,,0
- Response if AT+CMGR is used to read a non-existent record index: +CMS ERROR: invalid memory index
- The parameters <ra> and <tora> will only be displayed if parameter <ra> of the AT^SSCONF command is set to 1.
- Users should be aware that when using this AT command quickly after SIM PIN authentication the SIM data may not yet be accessible, resulting in a short delay before the requested AT command response is returned. See Section 23.1, Restricted access to SIM data after SIM PIN authentication for further detail.

13.7 AT+CMGS Send Short Message

The write command transmits a short message from TE to network (SMS-SUBMIT).
After invoking the write command wait for the prompt ">" and then start to write the message. To send the message simply enter <CTRL-Z>. After the prompt a timer will be started to observe the input.
To abort sending use <ESC>. Abortion is acknowledged with "OK", though the message will not be sent.
The message reference <mr> is returned to the TE on successful message delivery. The value can be used to identify the message in a delivery status report provided as an unsolicited result code.

Syntax

Test Command

AT+CMGS=?

Response(s)

OK

Write Command

If text mode (see AT+CMGF=1)

AT+CMGS=<da>[, <toda>]<CR> Text can be entered. <CTRL-Z>/<ESC>

Response(s)

+CMGS: <mr>[, <scts>]
OK
If sending fails see notes below.

Write Command

If PDU mode (see AT+CMGF=0)

AT+CMGS=<length><CR> PDU can be entered. <CTRL-Z>/<ESC>

Response(s)

+CMGS: <mr>[, <ackpdu>]
OK
If sending fails see notes below.

PIN	ASC0	ASC1	USB	MUX1	MUX2	MUX3	Charge	✈	Last
+	+	+	+	+	+	+	-	-	-

Reference(s)

GSM 07.05

Notes

- If sending fails, for example, if a message is too long, the result code depends on the current setting of the AT^SM20 command:
  If the AT^SM20 <CmgwMode> equals 1 (factory default) any failure to send a message is responded with "OK". Users should be aware, that despite the "OK" response, the message will not be sent to the subscriber.
  If the AT^SM20 <CmgwMode> equals 0 any failure to send a message is responded with "ERROR".
- If sending fails due to timeout, then
  AT^SM20 <CmgwMode>=1 causes "+CMS ERROR: unknown error" to be returned;
  AT^SM20 <CmgwMode>=0 causes "+CMS ERROR: timer expired" to be returned.
- Note that some providers do not recognize an @ symbol used in a short message. A widely used alternative is typing "*" as defined in GSM 03.40 (GPP TS 23.40).
- All characters entered behind the prompt ">" will be recognized as GSM characters. For example, "Backspace" (ASCII character 8) does not delete a character, but will be inserted into the short message as an additional physical character. As a result, the character you wanted to delete still appears in the text, plus the GSM code equivalent of the Backspace key.

- Message Length in Text Mode
  The maximum length of a short message depends on the used coding scheme: It is 160 characters if the 7 bit GSM coding scheme is used, and 140 characters according to the 8 bit GSM coding scheme.
  In case UCS2 character set selected it is highly recommended to set Data Coding Scheme (<dcs> of AT+CSMP) to 16-bit data, otherwise the length of sms user data is restricted to 88 octets. Even better for messages with UCS2 character set is the PDU Mode.
- At baudrates lower than 19200 it is recommended to use the line termination character only (refer to <n> of ATS3, default <CR>) before entering text or PDU. Use of the line termination character followed by the response formatting character (see <n> of ATS4, default <LF>) can cause problems.
- During a pending USSD user interaction the AT+CMGS write command returns "+CME ERROR: operation temporary not allowed" to prevent blocking situations.

13.8 AT+CMGW Write Short Messages to Memory

The execute and write commands transmit a short message (either SMS-DELIVER or SMS-SUBMIT) from TE to memory storage <mem2>. Memory location <index> of the stored message is returned. Message status will be set to 'stored unsent' unless otherwise given in parameter <stat>.
After invoking the execute or write command wait for the prompt ">" and then start to write the message. To save the message simply enter <CTRL-Z>. After the prompt a timer will be started to observe the input.
To abort writing use <ESC>. Abortion is acknowledged with "OK", though the message will not be saved.

Syntax

Test Command

AT+CMGW=?

Response(s)

OK

Exec Command

If text mode (see AT+CMGF=1):

AT+CMGW

Response(s)

<CR> Text can be entered. <CTRL-Z>/<ESC>
+CMGW: <index>
OK
If writing fails
ERROR
+CMS ERROR: <err>

Write Command

If text mode (see AT+CMGF=1):

AT+CMGW=<oa>/<da>[, [<tooa>/<toda>][, <stat>]]<CR> Text can be entered. <CTRL-Z>/<ESC>

Response(s)

+CMGW: <index>
OK
If writing fails see notes below.

Write Command

If PDU mode (see AT+CMGF=0):

AT+CMGW=<length>[, <stat>]<CR> PDU can be entered. <CTRL-Z>/<ESC>

Response(s)

+CMGW: <index>
OK
If writing fails see notes below.

PIN	ASC0	ASC1	USB	MUX1	MUX2	MUX3	Charge	✈	Last
+	+	+	+	+	+	+	-	+	-

Reference(s)

GSM 07.05

Notes

- If writing fails, for example, if a message is too long, the result code depends on the current setting of the AT^SM20 command:
  If the AT^SM20 <CmgwMode>=1 (factory default) any failure to send a message is responded with "OK". Users should be aware, that despite the "OK" response, the message will not be written to the selected SMS storage.
  If the AT^SM20 <CmgwMode> equals 0 any failure to write a message is responded with "ERROR".

- If writing fails due to timeout, then
  AT^SM20 <CmgwMode>=1 causes "+CMS ERROR: unknown error" to be returned;
  AT^SM20 <CmgwMode>=0 causes "+CMS ERROR: timer expired" to be returned.
- Note that some providers do not recognize an @ symbol used in a short message. A widely used alternative is typing "*" as defined in GSM 03.40 (GPP TS 23.40).
- For baudrates lower than 19200 it is recommended to use the line termination character only (refer to ATS3=<n>, default <CR>) before entering the text or PDU. Use of the line termination character followed by the response formating character (see ATS4= <n>, default <LF>) may cause problems.
- SMS-COMMANDs and SMS-STATUS-REPORTs cannot be stored in text mode.
- All characters entered behind the ">" prompt will be recognized as GSM characters. For example, "Backspace" (ASCII character 8) does not delete a character, but will be inserted into the short message as an additional physical character. As a result, the character you wanted to delete still appears in the text, plus the GSM code equivalent of the Backspace key.
- Message Length in Text Mode
  The maximum length of a short message depends on the used coding scheme: It is 160 characters if the 7 bit GSM coding scheme is used, and 140 characters according to the 8 bit GSM coding scheme.
  In case UCS2 character set selected it is highly recommended to set Data Coding Scheme (<dcs> of AT+CSMP) to 16-bit data, otherwise the length of sms user data is restricted to 88 octets. Even better for messages with UCS2 character set is the PDU Mode.
- The length of 8-bit data coded short messages has to be greater than 0.

13.9 AT+CMSS Send short messages from storage

The write command sends message with location value <index> from message storage <mem2> to the network (SMS-SUBMIT or SMS-COMMAND). If new recipient address <da> is given for SMS-SUBMIT, it shall be used instead of the one stored with the message. Reference value <mr> is returned to the TE on successful message delivery. Value can be used to identify message upon unsolicited delivery status report result code.
If the optional parameter <da> is given, the old status of the short message at <index> remains unchanged (see <stat>).

Syntax

Test Command

AT+CMSS=?

Response(s)

OK

Write Command

If text mode (AT+CMGF=1):

AT+CMSS=<index>[, <da>[, <toda>]]

Response(s)

+CMSS: <mr>[, <scts>]
OK
If sending fails
ERROR
+CMS ERROR: <err>

Write Command

If PDU mode (AT+CMGF=0):

AT+CMSS=<index>[, <da>[, <toda>]]

Response(s)

+CMSS: <mr>[, <ackpdu>]
OK
If sending fails
ERROR
+CMS ERROR: <err>

PIN	ASC0	ASC1	USB	MUX1	MUX2	MUX3	Charge	✈	Last
+	+	+	+	+	+	+	-	-	-

Reference(s)

GSM 07.05

13.10 AT+CNMA New Message Acknowledgement to ME/TE, only phase 2+

The write / execute command confirms successful receipt of a new message (SMS-DELIVER or SMS-STATUS-REPORT) routed directly to the TE. TA shall not send another +CMT or +CDS result code to TE until previous one is acknowledged. If ME does not receive acknowledgement within required time (network time-out), ME sends RP-ERROR to the network. TA shall automatically disable routing to TE by setting both <mt> and <ds> values of AT+CNMI to zero.

Syntax

Test Command

AT+CNMA=?

Response(s)

+CNMA: (list of supported <n>s)
OK

Exec Command

AT+CNMA

Response(s)

OK
ERROR
+CMS ERROR: <err>

Write Command

AT+CNMA=<n>

Response(s)

OK
ERROR
+CMS ERROR: <err>

PIN	ASC0	ASC1	USB	MUX1	MUX2	MUX3	Charge	✈	Last
+	+	+	+	+	+	+	-	-	-

Reference(s)

GSM 07.05

Parameter Description

<n>(num)

Parameter required only for PDU mode.

0	Command operates similarly as in text mode.

Notes

- The execute / write command shall only be used when AT+CSMS parameter <service> equals 1 (= phase 2+).
- The execute command can be used no matter whether text mode or PDU mode is activated. The write command is designed for the PDU mode only.
- If multiplex mode is activated (AT+CMUX=0) the AT+CNMI parameter will be set to zero on all channels, if one channel fails to acknowledge an incoming message within the required time.

13.11 AT+CNMI New short Message Indication

The write command selects the procedure how the receipt of new short messages from the network is indicated to the TE when TE is active, e.g. DTR signal is ON. If TE is inactive (e.g. DTR signal is OFF), message receiving should be done as specified in GSM 03.38. If the DTR signal is not available or the state of the signal is ignored (V.250 command AT&D0, reliable message transfer can be assured by using AT+CNMA acknowledgment procedure. The rules <mt>=2 and <mt>=3 for storing received messages are possible only if phase 2+ compatibility is activated with AT+CSMS=1. The parameter <ds>=1 is only available in phase 2+

Syntax

Test Command

AT+CNMI=?

Response(s)

+CNMI: (list of supported<mode>s), (list of supported <mt>s), (list of supported <bm>s), (list of supported <ds>s), (list of supported <bfr>s)
OK

Read Command

AT+CNMI?

Response(s)

+CNMI: <mode>, <mt>, <bm>, <ds>, <bfr>
OK

Write Command

AT+CNMI=<mode>[, <mt>[, <bm>[, <ds>[, <bfr>]]]]

Response(s)

OK
ERROR
+CMS ERROR: <err>

PIN	ASC0	ASC1	USB	MUX1	MUX2	MUX3	Charge	✈	Last
+	+	+	+	+	+	+	-	+	-

Reference(s)

GSM 07.05

Unsolicited Result Codes

URC 1

<mt>=1:

+CMTI: <mem3>, <index>

Indicates that new message has been received

URC 2

<mt>=2 (PDU mode enabled):

+CMT: <length><CR><LF><pdu>

Indicates that new message has been received

URC 3

<mt>=2 (text mode enabled):

+CMT: <oa>, <scts>[, <tooa>, <fo>, <pid>, <dcs>, <sca>, <tosca>, <length>]<CR><LF><data>

Indicates that new message has been received

URC 4

<bm>=2 (PDU mode enabled):

+CBM: <length><CR><LF><pdu>

Indicates that new cell broadcast message has been received

URC 5

<bm>=2 (text mode enabled):

+CBM: <sn>, <mid>, <dcs>, <page>, <pages><CR><LF><data>

Indicates that new cell broadcast message has been received

URC 6

<ds>=1 (PDU mode enabled):

+CDS: <length><CR><LF><pdu>

Indicates that new SMS status report has been received

URC 7

<ds>=1 (text mode enabled):

+CDS: <fo>, <mr>[, <ra>][, <tora>], <scts>, <dt>, <st>

Indicates that new SMS status report has been received

URC 8

<ds>=2:

+CDSI: <mem3>, <index>

Indicates that new SMS status report has been received

Parameter Description

<mode>(num)(&W)	
[0](&F)	Buffer unsolicited result codes in the TA. If TA result code buffer is full, indications can be buffered in some other place or the oldest indications may be discarded and replaced with the new received indications.
1	Discard indication and reject new received message unsolicited result codes when TA-TE link is reserved (e.g. in on-line data mode). Otherwise forward them directly to the TE.
2	Buffer unsolicited result codes in the TA when TA-TE link is reserved (e.g. in online data mode) and flush them to the TE after reservation. Otherwise forward them directly to the TE.
3	Forward unsolicited result codes directly to the TE. When TA-TE link is reserved (e.g. in online data mode) the URCs are signaled according to the AT^SCFG parameters <uri>, <udri> and <urat>

<mt>(num)(&W)(&V)	
Rules for storing received short messages depend on the relevant data coding method (refer to GSM 03.38), preferred memory storage (AT+CPMS) setting and this value. Note: If AT command interface is acting as the only display device, the ME must support storage of class 0 messages and messages in the message waiting indication group (discard message)	
[0](&F)	No SMS-DELIVER indications are routed to the TE.
1	If SMS-DELIVER is stored in ME/TA, indication of the memory location is routed to the TE using unsolicited result code.

2	SMS-DELIVERs, except class 2 messages and messages in the message waiting indication group (store message) are routed directly to the TE using unsolicited result code.
3	Class 3 SMS-DELIVERs are routed directly to the TE using unsolicited result codes defined in <mt>=2. Messages of other data coding schemes result in indication as defined in <mt>=1.

<bm>(num)(&W)(&V)

Rules for storing received CBMs depend on the relevant data coding method (refer to GSM 03.38), the setting of Select CBM Types (AT+CSCB) and this value:

[0](&F)	No CBM indications are routed to the TE.
2	New CBMs are routed directly to the TE using unsolicited result code.
3	Class 3 CBMs are routed directly to TE using unsolicited result codes defined in <bm>=2.

<ds>(num)(&W)(&V)

[0](&F)	No SMS-STATUS-REPORTs are routed to the TE.
1	SMS-STATUS-REPORTs are routed to the TE using unsolicited result code.
2	If SMS-STATUS-REPORT is routed into ME/TA, indication of the memory location is routed to the TE using unsolicited result code.

<bfr>(num)(&V)

[1](&F)	TA buffer of unsolicited result codes defined within this command is cleared when <mode> changes from 0 to 1...3.

<index>(num)

Integer type; value in the range of location numbers supported by the associated memory

Notes

- Parameters <mt>=2,3 and <ds>=1 are only available with GSM phase 2+ (see AT+CSMS=1). Incoming SMs or Status Reports have to be acknowledged with AT+CNMA=0 when using these phase 2+ parameters.
- Requirements specific to Multiplex mode:
  In multiplex mode (AT+CMUX=0) only one channel can use a phase 2+ parameter. The parameter for <mt> and <ds> on the other channels have to be set to zero. If either a SM or a Status Report is not acknowledged, all AT+CNMI parameter in all channels will be set to zero.
- If the ME operates on different instances (MUX channels 1, 2, 3 or ASC0/ASC1) avoid different settings for routing and indicating short messages. For example, if messages shall be routed directly to one instance of the TE (set with AT+CNMI, AT^SSDA), it is not possible to activate the presentation of URCs with AT+CMER or AT+CNMI on another instance. Any attempt to activate settings that conflict with existing settings on another interface, will result in "+CME ERROR", or accordingly "+CMS ERROR".
- Handling of Class 0 short messages:
  If the host application is provided with a display and AT^SSDA=1 has been set Class 0 short messages can be displayed immediately.
  If the host application does not include a display, ME handles Class 0 short messages as though there was no message class, i.e. it will ignore bits 0 and 1 in the <dcs> and normal rules for exceeded memory capacity shall apply. This approach is compliant with GSM 03.38 .
- The parameters <ra> and <tora> will only be displayed if <ra> of the AT^SSCONF command is set to 1.
- If either a SM or a Status Report is not acknowledged, all AT+CNMI parameter in all channels will be set to zero.

13.12 AT+CPMS Preferred SMS message storage

The write command selects memory storages <mem1>,<mem2>, <mem3> to be used for reading, writing, etc.

Syntax

Test Command

AT+CPMS=?

Response(s)

+CPMS: (list of supported <mem1>s), (list of supported <mem2>s), (list of supported <mem3>s)
OK

Read Command

AT+CPMS?

Response(s)

+CPMS: <mem1>, <used1>, <total1>, <mem2>, <used2>, <total2>, <mem3>, <used3>, <total3>
OK
ERROR
+CMS ERROR: <err>

Write Command

AT+CPMS=<mem1>[, <mem2>[, <mem3>]]

Response(s)

+CPMS: <used1>, <total1>, <used2>, <total2>, <used3>, <total3>
OK
ERROR
+CMS ERROR: <err>

PIN	ASC0	ASC1	USB	MUX1	MUX2	MUX3	Charge	✈	Last
+	+	+	+	+	+	+	-	+	-

Reference(s)

GSM 07.05

Parameter Description

<used1>(num)

Number of messages currently in <mem1>

<used2>(num)

Number of messages currently in <mem2>

<used3>(num)

Number of messages currently in <mem3>

<total1>(num)

Number of messages storable in <mem1>

<total2>(num)

Number of messages storable in <mem2>

<total3>(num)

Number of messages storable in <mem3>

Notes

- The Mobile Equipment storage "ME" offers space for 25 short messages, see <mem1>.
- "MT" is the sum of "ME" (= 25 locations) and "SM" (capacity varies with SIM card). The indices <index> of the "MT" storage are dependent on the order selected with AT^SSMSS
- The <mem1>, <mem2> and <mem3> parameter will be stored in non-volatile memory.
- The user should be aware that the setting "MT" involves "ME" and "SM", with "ME" being filled up first. If the "ME" storage is full, TC65i will proceed with the "SM" storage.
  Incoming Class 1 short messages (ME specific) will be preferably stored to "ME" and may be transferred to the "SM" storage if "ME" is used up.
  Incoming Class 2 messages (SIM specific) will be stored to the SIM card only, no matter whether or not there is free "ME" space. As a result, the ^SMGO: 2 indication (see AT^SMGO) may be presented without prior indication of ^SMGO: 1. For more information regarding SIM and ME specific message classes refer to <dcs> and the following specifications: GSM 03.38 and 3GPP TS23038.
- Multiplexer: In Multiplex mode or when the two physical serial interfaces are connected, the parameter <mem3> will be the same on all instances, but the settings of <mem1> and <mem2> may vary on each channel / interface. As a result, changes on parameter <mem1> and/or <mem2> befor activating the multiplexer or differences values for other instanes can result in not desired behaviours like different outputs for AT+CMGL and so on.
- While <mem3> equals "SM" and <mem1> equals "ME" it is possible that, after deleting short messages from "ME", the freed space on "ME" is reclaimed for new incoming short messages, when there is no space left on the "SM" storage. As it is often the clients concern to have received short messages stored only to the SIM card, inconsistent settings should be generally avoided. This can be achieved simply by using the same parameter for all memory indices.
- Users should be aware that when using this AT command quickly after SIM PIN authentication the SIM data may not yet be accessible, resulting in a short delay before the requested AT command response is returned. See Section 23.1, Restricted access to SIM data after SIM PIN authentication for further detail.
- The indices <index> of the storage are dependent on the order selected with AT^SSMSS.

13.13 AT+CSCA SMS Service Center Address

Write command updates the SMSC address, through which mobile originated SMs are transmitted. In text mode, setting is used by send and write commands. In PDU mode, setting is used by the same commands, but only when the length of the SMSC address coded into the <pdu> parameter equals zero.

Syntax

Test Command

AT+CSCA=?

Response(s)

OK

Read Command

AT+CSCA?

Response(s)

+CSCA: <sca>, <tosca>
OK

Write Command

AT+CSCA=<sca>[, <tosca>]

Response(s)

OK

PIN	ASC0	ASC1	USB	MUX1	MUX2	MUX3	Charge	✈	Last
+	+	+	+	+	+	+	-	+	-

Reference(s)

GSM 07.05

Notes

- In case of using no parameter after AT+CSCA= the content of <sca> will be deleted.
- This command writes the service center address to non-volatile memo.
- The SMS service center address should be entered as specified by the service provider.

13.14 AT+CSCB Select Cell Broadcast Message Indication

The test command returns the supported modes as a compound value.
The write command selects which types of CBMs are to be received by the ME.

Syntax

Test Command

AT+CSCB=?

Response(s)

+CSCB: (list of supported <mode>s)
OK

Read Command

AT+CSCB?

Response(s)

+CSCB: <mode>, <mids>, <dcss>
OK

Write Command

AT+CSCB=<mode>[, <mids>[, <dcss>]]

Response(s)

OK

PIN	ASC0	ASC1	USB	MUX1	MUX2	MUX3	Charge	✈	Last
+	+	+	+	+	+	+	-	+	-

Reference(s)

GSM 07.05

Parameter Description

<mode>(num)

Message mode

0(&F)	Accept messages that are defined in <mids> and <dcss>
1	Forbid messages that are defined in <mids> and <dcss>

<mids>(str)

Cell Broadcast Message ID specification

[""](&F)	default value of this parameter is empty string, and it means that no CBM identifiers are specified.

- For <mode>=0: Six different possible combinations of CBM IDs (e.g. "0,1,5,320-478,922,2000-3000").
  In certain configurations, e.g. if using SIMs that contain data in Elementary File EF-CBMID (Cell Broadcast Message Identifier for Data download) less than six combinations may be available.
  To access a SIM's Elementary File data refer to command AT+CRSM.
- For <mode>=1: One CBM ID or range of IDs (e.g. "320-478").

<dcss>(str)

CBM data coding scheme specification

[""](&F)	default value of this parameter is empty string

All different possible combinations of CBM data coding schemes (e.g. "0-3,5"). Using default empty string leads to get all CBMs independent of their dcss.
A given <dcss> replaces any former value and is used for consecutive requests.

13.15 AT+CSDH Show SMS text mode parameters

The write command sets whether or not detailed header information is shown in text mode result codes.

Syntax

Test Command
AT+CSDH=?
Response(s)
+CSDH: ((list of supported <show>s) OK
Read Command
AT+CSDH?
Response(s)
+CSDH:<show> OK
Write Command
AT+CSDH=<show>
Response(s)
+CSDH: <show> OK

PIN	ASC0	ASC1	USB	MUX1	MUX2	MUX3	Charge	✈	Last
+	+	+	+	+	+	+	-	+	-

Reference(s)

GSM 07.05

Parameter Description

<show>(num)(&W)	
[0](&F)	Do not show header values defined in commands AT+CSCA and AT+CSMP (<sca>, <tosca>,<fo>,<vp>, <pid> and <dcs>) nor <length>, <toda> or <tooa> in "+CMTI", AT+CMGL, AT+CMGR result codes for SMS-DELIVERs and SMS-SUBMITs in text mode; for SMS-COMMANDs in +CMGR result code, do not show <pid>,<mn>,<da>, <toda>, <length> or <cdata>
1	Show the values in result codes

13.16 AT+CSMP Set SMS text Mode Parameters

The write command selects values for additional parameters needed when the short message is sent to the network or placed in a storage when text format message mode is selected.
It is possible to set the validity period starting from the time when the short message is received by the SMSC (<vp> is in range 0... 255) or define the absolute time of the validity period termination (<vp> is a string). The format of <vp> is given by <fo>. If TA supports the enhanced validity period format, see GSM 03.40), it shall be given as a hexadecimal coded string (e.g. <pdu>) with quotes.

Syntax

Test Command

AT+CSMP=?

Response(s)

OK

Read Command

AT+CSMP?

Response(s)

+CSMP:<fo>, <vp>/ <scts>, <pid>, <dcs>
OK

Write Command

AT+CSMP=<fo>[, <vp>/<scts>[, <pid>[, <dcs>]]]

Response(s)

+CSMP: <index>
OK
If sending fails
ERROR
+CMS ERROR: <err>

PIN	ASC0	ASC1	USB	MUX1	MUX2	MUX3	Charge	✈	Last
+	+	+	+	+	+	+	-	+	-

Reference(s)

GSM 07.05

Parameter Description

<fo>(num)

First Octet

depending on the command or result code: first octet of GSM 03.40 SMS-DELIVER, SMS-SUBMIT (default 17), SMS-STATUS-REPORT, or SMS-COMMAND (default 2) in integer format

0...17(&F)...255

<vp>(num)

Depending on SMS-SUBMIT <fo> setting: GSM 03.40 TP-Validity-Period either in integer format or in time-string format (refer <dt>)

0...167(&F)...255

<dcs>(num)

Data Coding Scheme

GSM 03.38 SMS Data Coding Scheme, or Cell Broadcast Data Coding Scheme in integer format

0(&F)...247

<pid>(num)

Protocol Identifier

GSM 03.40 TP-Protocol-Identifier in integer format

0(&F)...255

Notes

- When storing a SMS DELIVER from the TE to the preferred memory storage in text mode (using the AT+CMGW write command), <vp> field can be used for <scts>.
- The command writes the parameters to the non-volatile memory.

13.17 AT+CSMS Select Message Service

Syntax

Test Command

AT+CSMS=?

Response(s)

+CSMS: (list of supported<service>s)
OK

Read Command

AT+CSMS?

Response(s)

+CSMS: <service>, <mt>, <mo>, <bm>
OK

Write Command

AT+CSMS=<service>

Response(s)

+CSMS: <mt>, <mo>, <bm>
OK
ERROR
+CMS ERROR: <err>

PIN	ASC0	ASC1	USB	MUX1	MUX2	MUX3	Charge	✈	Last
+	+	+	+	+	+	+	-	+	-

Reference(s)

GSM 07.05

Parameter Description

<service>(num)(&W)(&V)

0(&F)	GSM 03.40 and GSM 03.41 (the syntax of SMS AT commands is compatible with GSM 07.05 Phase 2 version 4.7.0; Phase 2+ features which do not require new command syntax may be supported, e.g. correct routing of messages with new Phase 2+ data coding schemes)
1	GSM 03.40 and GSM 03.41 (the syntax of SMS AT commands is compatible with GSM 07.05 Phase 2+ version; the requirement of <service> setting 1 is mentioned under corresponding command descriptions).

<mt>(num)

Mobile Terminated Messages:

0	Type not supported
1	Type supported

<mo>(num)

Mobile Originated Messages:

0	Type not supported
1	Type supported

<bm>(num)

Broadcast Type Messages:

0	Type not supported
1	Type supported

Notes

- If CSMS mode is switched from Phase 2+ to Phase 2 and one or more AT+CNMI Parameter are Phase 2+ specific a "+CMS ERROR: unknown error" will appear. It is recommended to switch the AT+CNMI Parameters to Phase 2 specific values before entering Phase 2.
- Phase 2+ (<service>=1) must be set before the following features can be used:
  - Configuring procedures for indicating received short messages with the AT+CNMI parameters <mt>=2 or <mt>=3 and <ds>=1.
  - Acknowledging incoming short messages with AT+CNMA.
  - Receiving Status Reports and acknowledging them with AT+CNMA.

13.18 AT^SCML List Concatenated Short Messages from preferred store

The write command returns messages with status value <stat> from message storage <mem1> to the TE. If the status of the message is 'received unread', the status in the storage changes to 'received read'. The execute command is the same as the write command with the given default for <stat>. See notes of AT+CMGL.

Syntax

Test Command

AT^SCML=?

Response(s)

^SCML: (list of supported <stat>s)
OK

Exec Command

AT^SCML

Response(s)

^SCML: (see write command for default of <stat>)
OK

Write Command

AT^SCML=<stat>

Response(s)

Output if text mode (AT+CMGF=1) and command successful:
For SMS-SUBMITs and/or SMS-DELIVERs
^SCML: <index>, <stat>, <oa>/<da>, [<alpha>], [<scts>][, <tooa>/<toda>, <length>][, <seq>, <max>, <ieia>, <ref>]
<data>
[...]
OK

For SMS-STATUS-REPORTs
^SCML: <index>, <stat>, <fo>, <mr>, [<ra>], [<tora>], <scts>, <dt>, <st>
[...]
OK

For SMS-Commands
^SCML: <index>, <stat>, <fo>, <ct>
[...]
OK

Output if PDU mode (AT+CMGF=0) and command successful:
For SMS- SUBMITs and/or SMS-DELIVERs
^SCML: <index>, <stat>, [<alpha>], <length>
<pdu>
[...]
OK

If error is related to ME functionality
ERROR
+CMS ERROR: <err>

PIN	ASC0	ASC1	USB	MUX1	MUX2	MUX3	Charge	✈	Last
+	+	+	+	+	+	+	-	+	-

13.19 AT^SCMR Read Concatenated Short Messages

The write command returns the message with location value <index> from message storage <mem1> to the TE. If the status of the message is 'received unread', the status in the storage changes to 'received read'. See notes of AT+CMGR.

Syntax

Test Command

AT^SCMR=?

Response(s)

OK

Write Command

AT^SCMR=<index>

Response(s)

Output if text mode (AT+CMGF=1) and command successful:
For SMS-DELIVER

^SCMR: <stat>, <oa>, [<alpha>], <scts>[, <tooa>, <fo>, <pid>, <dcs>, <sca>, <tosca>, <length>][, <seq>, <max>, <ieia>, <ref>]
<data>
[...]
OK

For SMS-SUBMIT

^SCMR: <stat>, <da>, [<alpha>][, <toda>, <fo>, <pid>, <dcs>, [<vp>], <sca>, <tosca>, <length>][, <seq>, <max>, <ieia>, <ref>]
<data>
[...]
OK

For SMS-STATUS-REPORT

^SCMR: <stat>, <fo>, <mr>, [<ra>], [<tora>], <scts>, <dt>, <st>
<data>
[...]
OK

For SMS-Commands

^SCMR: <stat>, <fo>, <ct>[, <pid>, [<mn>], [<da>], [<toda>], <length>]
<data>
[...]
OK

Output if PDU mode (AT+CMGF=0) and command successful:
For SMS-SUBMITs and/or SMS-DELIVERs

^SCMR: <stat>, [<alpha>], <length>
<pdu>
[...]
OK

ERROR
+CMS ERROR: <err>

PIN	ASC0	ASC1	USB	MUX1	MUX2	MUX3	Charge	✈	Last
+	+	+	+	+	+	+	-	+	-

13.20 AT^SCMS Send Concatenated Short Messages

Sending a concatenated message is similar to sending a "normal" message, except that each segment of the concatenated message must be identified by the additional parameters <seq>, <ieia> and <ref>. To send all segments of the message one by one, the AT^SCMS write command must be executed for each segment.
The write command transmits one segment of a concatenated short message from TE to network (SMS-SUBMIT).
After invoking the write command wait for the prompt ">" and then start to write the message. To send the message simply enter <CTRL-Z>. After the prompt a timer will be started to observe the input.
To abort sending use <ESC>. Abortion is acknowledged with "OK", though the message will not be sent.
The message reference <mr> is returned to the TE on successful message delivery. The value can be used to identify the message in a delivery status report provided as an unsolicited result code.

Syntax

Test Command

AT^SCMS=?

Response(s)

OK

Write Command

Command syntax for text mode (see AT+CMGF=1):

AT^SCMS=<da>[, <toda>], <seq>, <max>, <ieia>, <ref><CR> Text can be entered <CTRL-Z>/<ESC>

Response(s)

^SCMS: <mr>[, <scts>]
OK
If sending fails
ERROR
+CMS ERROR: <err>

PIN	ASC0	ASC1	USB	MUX1	MUX2	MUX3	Charge	✈	Last
+	+	+	+	+	+	+	-	-	-

Notes

- See notes provided for AT+CMGS.
- Command is only available if AT+CMGF=1.

13.21 AT^SCMW Write Concatenated Short Messages to Memory

Writing a concatenated message to the memory is similar to writing a "normal" message, except that each segment of the concatenated message must be identified by the additional parameters <seq>, <ieia> and <ref>. To store all segments of the message one by one, the AT^SCMW write command must be executed for each segment.
The write commands transmits one segment of a concatenated SMS (either SMS-DELIVER or SMS-SUBMIT) from TE to memory storage <mem2>. Memory location <index> of the stored message is returned. Message status will be set to 'stored unsent' unless otherwise given in parameter <stat>.

Syntax

Test Command

AT^SCMW=?

Response(s)

OK

Write Command

If text mode (see AT+CMGF=1)

AT^SCMW=<oa>/<da>, [<tooa>/<toda>][, <stat>], <seq>, <max>, <ieia>, <ref><CR> Text can be entered. <CTRL-Z>/<ESC>

Response(s)

^SCMW: <index>
OK
If writing fails
ERROR
+CMS ERROR: <err>

PIN	ASC0	ASC1	USB	MUX1	MUX2	MUX3	Charge	✈	Last
+	+	+	+	+	+	+	-	+	-

Notes

- Command is only available if AT+CMGF=1.
- To send or delete a concatenated short message please use the known SMS commands, see AT+CMSS for sending and AT+CMGD for deleting.
- See notes provided for AT+CMGW.

13.22 AT^SLMS List SMS Memory Storage

AT^SLMS indicates the max. capacity of each SMS storage type and the number of locations currently used.

Syntax

Test Command

```
AT^SLMS=?
```

Response(s)

```
OK
```

Exec Command

```
AT^SLMS
```

Response(s)

```
^SLMS: "MT",<total3>, <used3>
^SLMS: "SM",<total1>, <used1>
^SLMS: "ME",<total2>, <used2>
OK
ERROR
+CMS ERROR: <err>
```

PIN	ASC0	ASC1	USB	MUX1	MUX2	MUX3	Charge	✈	Last
+	+	+	+	+	+	+	-	+	-

Parameter Description

<total1>(num)

Maximum number of messages storable in the SMS memory of the SIM (physical storage "SM")

<total2>(num)

Maximum number of messages storable in the SMS memory of the Mobile Equipment (physical storage "ME")

<total3>(num)

Sum of "SM" and "ME", indicated as "MT". Maximum number of all messages storable in the SIM memory and the Mobile Equipment memory.

<used1>(num)

Number of messages currently stored in the SMS memory of the SIM (physical storage "SM")

<used2>(num)

Number of messages currently stored in the SMS memory of the Mobile Equipment (physical storage "ME")

<used3>(num)

Concatenated logical SMS storages of SIM ("SM") and Mobile Equipment ("ME"). Sum of all messages currently stored, indicated as "MT".

Note

- Users should be aware that when using this AT command quickly after SIM PIN authentication the SIM data may not yet be accessible, resulting in a short delay before the requested AT command response is returned. See Section 23.1, Restricted access to SIM data after SIM PIN authentication for further detail.

13.23 AT^SMGL List Short Messages from preferred store without setting status to REC READ

The write command allows to select a status type and lists, from the message storage <mem1>, all messages that currently have the specified <stat>. The major difference over the standard command AT+CMGL is that the status of the listed messages remains u n c h a n g e d (unread remains unread).
The execute command is the same as the write command, but uses the given default of <stat>.

Syntax

Test Command

AT^SMGL=?

Response(s)

same as AT+CMGL

Exec Command

AT^SMGL

Response(s)

^SMGL: (For default values of <stat>, see "Section 13.1, SMS parameters.)
OK

Write Command

AT^SMGL=<stat>

Response(s)

same as AT+CMGL

PIN	ASC0	ASC1	USB	MUX1	MUX2	MUX3	Charge	✈	Last
+	+	+	+	+	+	+	-	+	-

Notes

- The selected <mem1> can contain different types of SMs (e.g. SMS-DELIVERs, SMS-SUBMITs, SMS-STATUS-REPORTs and SMS-COMMANDs), the response may be a mix of the responses of different SM types. TE application can recognize the response format by examining the third response parameter.
- Users should be aware that when using this AT command quickly after SIM PIN authentication the SIM data may not yet be accessible, resulting in a short delay before the requested AT command response is returned. See Section 23.1, Restricted access to SIM data after SIM PIN authentication for further detail.
- If the ME is Java controlled, take into account that the AT Command API can handle responses up to a length of 1024 bytes. To avoid any longer re-sponses it is recommended not to read the entire range of short message entries at a time.

13.24 AT^SMGO Set or query SMS overflow presentation mode or query SMS overflow

The write command sets the overflow presentation mode.
The read command returns the overflow presentation mode and the SMS overflow status.

Syntax

Test Command

```
AT^SMGO=?
```

Response(s)

```
^SMGO: (list of supported<n>s)
OK
```

Read Command

```
AT^SMGO?
```

Response(s)

```
^SMGO: <n>,<mode>
OK
ERROR
+CMS ERROR: <err>
```

Write Command

```
AT^SMGO=<n>
```

Response(s)

```
OK
ERROR
+CMS ERROR: <err>
```

PIN	ASC0	ASC1	USB	MUX1	MUX2	MUX3	Charge	✈	Last
+	+	+	+	+	+	+	-	+	-

Unsolicited Result Code

SMS buffer change:

^SMGO: <mode>

Status of SMS buffer has changed.

Parameter Description

<n>(num)(&W)(&V)

SMS overflow presentation mode

[0](&F)	Disable
1	Enable

<mode>(num)(&V)

SMS overflow status

0	Space available
1	SMS buffer full (The buffer for received short messages is <mem3>. See AT+CPMS.)
2	Buffer full and new message waiting in SC for delivery to phone

Notes

- Incoming short messages with message class 1 (ME specific short messages) or class 2 (SIM specific short messages), see <dcs> in GSM 03.38, will be stored either in "ME" or in "SM" storage. Therefore the "^SMGO: 2" indication could occur, without issuing the indication "^SMGO: 1" before. The indication "^SMGO: 1" means that both buffers ("ME" and "SM") are full.
- For more information regarding SIM and ME specific message classes refer to <dcs> and the following specifications: GSM 03.38 and 3GPP TS 23.038 .

13.25 AT^SMGR Read short message without setting status to REC READ

The AT^SMGR command is a proprietary command which has the same syntax as AT+CMGR. The only functional difference is that the status "REC UNREAD" of a short message is not overwritten to "REC READ".

Syntax

Test Command
AT^SMGR=?
Response(s)
^SMGR: OK

Write Command
AT^SMGR=<index>
Response(s)
see AT+CMGR

PIN	ASC0	ASC1	USB	MUX1	MUX2	MUX3	Charge	✈	Last
+	+	+	+	+	+	+	-	+	-

Note

- Users should be aware that when using this AT command quickly after SIM PIN authentication the SIM data may not yet be accessible, resulting in a short delay before the requested AT command response is returned. See Section 23.1, Restricted access to SIM data after SIM PIN authentication for further detail.

13.26 AT^SSCONF SMS Command Configuration

AT^SSCONF controls details of some SMS releated commands. Please note that AT^SSCONF settings are stored volatile, i.e. after restart or reset the default values will be restored.

Syntax

Test Command
AT^SSCONF=?
Response(s)
^SSCONF: list of supported <ra>s OK

Read Command
AT^SSCONF?
Response(s)
^SSCONF: <ra> OK

Write Command
AT^SSCONF=<ra>
Response(s)
OK

PIN	ASC0	ASC1	USB	MUX1	MUX2	MUX3	Charge	✈	Last
-	+	+	+	+	+	+	-	+	-

Parameter Description

<ra>(num)	
Display recipient address	
[0](&F)	TC65i does not display <ra> and <tora>. These parameters are used with the result codes of AT+CMGL, AT^SMGL, AT+CMGR, AT^SMGR and the URC "+CDS".
1	TC65i displays <ra> and <tora>.

13.27 AT^SSDA Set SMS Display Availability

This command allows to notify the TC65i of its controlling application's capability to immediately display incoming SMS on a display.
If the application is able to display incoming short messages, a class 0 message shall be displayed immediately. However, if it does not, class 0 messages shall be treated as if no message class is determined (GSM 03.38[21]).
The effect of this command if <da>=1 is to determine the behavior of parameter <mt> of AT+CNMI:
If multiplex mode is enabled (AT+CMUX) and <da>=1 with <mt>=1 is set on any logical channel, all other channels have to use <mt>=0.

Syntax

Test Command

AT^SSDA=?

Response(s)

^SSDA: list of supported <da>s
OK

Read Command

AT^SSDA?

Response(s)

^SSDA: <da>
OK

Write Command

AT^SSDA=<da>

Response(s)

OK

PIN	ASC0	ASC1	USB	MUX1	MUX2	MUX3	Charge	✈	Last
-	+	+	+	+	+	+	-	+	-

Parameter Description

<da>(num)

Display Availability

0(&F)	Application is not able to display incoming short message
1	Application is able to display incoming short message

Note

- If the ME operates on different instances (MUX channels 1, 2, 3 or ASC0/ASC1) avoid different settings for routing and indicating short messages. For example, if messages shall be routed directly to one instance of the TE (set with AT+CNMI, AT^SSDA), it is not possible to activate the presentation of URCs with AT+CMER or AT+CNMI on another instance. Any attempt to activate settings that conflict with existing settings on another interface, will result in "+CME ERROR", or accordingly "+CMS ERROR".

13.28 AT^SSMSS Set Short Message Storage Sequence

The short message storage "MT" (see AT+CPMS) is a logical storage. It consists of two physical storages "ME" and "SM". This command allows to select the sequence of addressing this storage.

Syntax

Test Command
AT^SSMSS=?
Response(s)
^SSMSS: (list of supported) <seq>s

Read Command
AT^SSMSS?
Response(s)
^SSMSS: <seq> OK

Write Command
AT^SSMSS=<seq>
Response(s)
OK

PIN	ASC0	ASC1	USB	MUX1	MUX2	MUX3	Charge	✈	Last
+	+	+	+	+	+	+	-	+	-

Parameter Description

<seq>(num)

MT sequence

0(&F)	"MT" storage is "ME" then "SM
1	"MT" storage is "SM" then "ME"

Note

- The <seq> parameter will be stored in non-volatile memory.

14. SIM related Commands

The AT commands described in this chapter are related to the Subscriber Identity Module (SIM) connected to TC65i.

Note:
If using data from the SIM please bear in mind that the content of all Elementary Files is *subject to change* at any moment!
This is because the network can change the SIM's data in the background via the SIM Application Toolkit (SAT) procedure "Data download to SIM". For a detailed description please refer to GSM 11.14, [26].
To get informed that changing Elementary Files has taken place the TA needs to hook to the SAT Proactive Command "REFRESH". To achieve this, the AT command interface of SAT, i.e. Remote-SAT, needs to be activated. An overview is given at Chapter 16., SIM Application Toolkit (SAT) Commands, additional information is available with the document "Remote-SAT User Guide" [4].

14.1 AT+CRSM Restricted SIM Access

AT+CRSM offers easy access of the Elementary Files on the SIM. Access to the SIM database is restricted to the commands which are listed at <command>. However, additional SIM commands are available via AT^SXSM.
All parameters of AT+CRSM are used as specified by GSM 11.11 [25]. TC65i handles internally all required SIM interface locking and file selection routines.
As response to the command, the TC65i sends the actual SIM information parameters and response data. Error result code "+CME ERROR" may be returned if the command cannot be passed to the SIM, e.g. if the SIM is not inserted. However, failure in the execution of the command in the SIM is reported in <sw1> and <sw2> parameters.

AT+CRSM requires PIN authentication. However, using <command> "READ BINARY" and <command> "READ RECORD" is possible before PIN authentication and if the SIM is blocked (state after three failed PIN authentication attempts) to access the contents of the following Elementary Files:

EF Symbol	EF Name	EF ID (hex.)	EF ID (dec.)
EF_{ICCID}	ICC identification	2FE2	12258
EF_{ELP}	Extended language preference	2F05	12037
EF_{LP}	Language preference	6F05	28421
EF_{SPN}	Service provider name	6F46	28486
EF_{AD}	Administrative data	6FAD	28589
EF_{Phase}	Phase identification	6FAE	28590
EF_{ECC}	Emergency call codes	6FB7	28599

Please beware of *possible changes to Elementary Files* by the network at any time, refer Chapter 14., SIM related Commands.

Syntax

Test Command
AT+CRSM=?
Response(s)
OK

Write Command

AT+CRSM=<command>[, <fileID>[, <P1>, <P2>, <P3>[, <data>]]]

Response(s)

+CRSM: <sw1>,<sw2>[,<response>]
OK
ERROR
+CME ERROR: <err>

PIN	ASC0	ASC1	USB	MUX1	MUX2	MUX3	Charge	✈	Last
±	+	+	+	+	+	+	-	+	-

Reference(s)

GSM 07.07

Parameter Description

<command>(num)

SIM command number.

176	READ BINARY
178	READ RECORD
192	GET RESPONSE
214	UPDATE BINARY
220	UPDATE RECORD
242	STATUS

<fileID>(num)

Identifier for an elementary data file on SIM, if used by <command>.

<P1>(num)

Parameter to be passed on by the TC65i to the SIM.

0...255

<P2>(num)

Parameter to be passed on by the TC65i to the SIM.

0...255

<P3>(num)

Parameter to be passed on by the TC65i to the SIM.

0...255

<data>(str)

Information which shall be written to the SIM (hexadecimal character format).

<sw1>(num)

Status information from the SIM about the execution of the actual command. It is returned in both cases, on successful or failed execution of the command.

0...255

<sw2>(num)

Status information from the SIM about the execution of the actual command. It is returned in both cases, on successful or failed execution of the command.

0...255

<response>(str)

Response data in case of a successful completion of the previously issued command.
"STATUS" and "GET RESPONSE" commands return data, which gives information about the currently selected elementary data field. This information includes the type of file and its size.
After "READ BINARY" or "READ RECORD" commands the requested data will be returned.
<response> is empty after "UPDATE BINARY" or "UPDATE RECORD" commands.

14.2 AT+CSIM Generic SIM Access

AT+CSIM allows direct control of the SIM.
Compared to Restricted SIM Access command AT+CRSM, the definition of AT+CSIM allows the ME to take more control over the SIM interface.
For parameter and SIM result coding please refer GSM 11.11 [25].
However, only the following SIM commands are supported by AT+CSIM: SELECT, STATUS, READ BINARY, UPDATE BINARY, READ RECORD, UPDATE RECORD, SEEK, INCREASE and GET RESPONSE.

The SIM interface design requires that some actions need more than one command, e.g. access to an Elementary File's data requires a prior SELECT command. To ensure that two commands related to the same action are sent to the SIM consecutively, i.e. without being interrupted by other software entities, each SELECT command will be buffered in an internal directory path. Before performing new commands the internal directory path will be checked to enable the retransmittion of the buffered SELECT command's (explicit selection).
The directory path can be used to queue up to 20 Files e.g. 19 Dedicated Files (DF's) and 1 Elementary File (EF).
After each AT+CSIM execution the Master File (MF) which acts as a logical root will be selected to guarantee that other software entities are not affected.

Syntax

Test Command

```
AT+CSIM=?
```

Response(s)

```
OK
```

Write Command

```
AT+CSIM=<length>, <command>
```

Response(s)

```
+CSIM: <length>,<response>
OK
ERROR
+CME ERROR: <err>
```

PIN	ASC0	ASC1	USB	MUX1	MUX2	MUX3	Charge	✈	Last
-	+	+	+	+	+	+	-	+	-

Reference(s)

GSM 07.07

Parameter Description

<length>(num)

Length of <command> or <response> string.

<command>(str)

Command passed on by the ME to the SIM.

<response>(str)

Response data of the command returned by the SIM.

Example

The following examples explain how to use AT+CSIM.

```
AT+CSIM=14,"A0A40000027F10"
+CSIM: 4,"9F19"

OK
```

Select DF-Telekom
Command successful, length '19' of the response data

AT+CSIM=14,"A0A40000026F3A"	Select EF-ADN (Abbreviated dialling numbers)
+CSIM: 4,"9F0F"	Command successful, length '0F' of the response data
OK	
AT+CSIM=16,"A0C000000F000000"	Get Response
+CSIM: 34,"000002306F3A040011F0220102011C9000"	
OK	

14.3 AT^SATR Query SIM's Answer to Reset Data

AT^SATR queries the Answer to Reset (ATR) data of the current SIM ISO/IEC 7816-3. The response to the execute command is a data string of max. 33 bytes sent from the SIM card to the module, containing information about the SIM and the used data transmission protocols. For ATR coding please refer to GSM 11.11 [25].

Syntax

Test Command

```
AT^SATR=?
```

Response(s)

```
OK
```

Exec Command

```
AT^SATR
```

Response(s)

```
^SATR: <response>
OK
ERROR
+CME ERROR: <err>
```

PIN	ASC0	ASC1	USB	MUX1	MUX2	MUX3	Charge	✈	Last
-	+	+	+	+	+	+	-	+	-

Parameter Description

<response>(str)

Answer to Reset (ATR) data of current SIM.

14.4 AT^SXSM Extended SIM Access

AT^SXSM extends AT+CRSM with additional SIM commands.
All parameters of AT^SXSM are used as specified by GSM 11.11 [25]. TC65i handles internally all required SIM interface locking and file selection routines.
TC65i may return error result code "+CME ERROR" if the command cannot be passed to the SIM, e.g. if no SIM is inserted. However, errors related to SIM action are reported in <sw1> and <sw2> parameters as defined in GSM 11.11 [25].

Syntax

Test Command

```
AT^SXSM=?
```

Response(s)

```
OK
```

Write Command

```
AT^SXSM=<command>[, <fileID>[, <P1>, <P2>, <P3>[, <data>]]]
```

Response(s)

```
^SXSM: <sw1>, <sw2>[,<response>]
OK
ERROR
+CME ERROR: <err>
```

PIN	ASC0	ASC1	USB	MUX1	MUX2	MUX3	Charge	✈	Last
+	+	+	+	+	+	+	-	+	-

Parameter Description

<command>(num)

136	RUN GSM ALGORITHM Start the authentication mechanism and cipher key generation on the SIM. It runs the algorithms A3 and A8 using a 16 byte random number and the subscriber authentication key Ki, which is stored in the SIM.

<fileID>(num)

Identifier for an elementary data file on SIM, if used by <command>.

<P1>(num)

Parameter to be passed on by the TC65i to the SIM.

<P2>(num)

Parameter to be passed on by the TC65i to the SIM.

<P3>(num)

Parameter to be passed on by the TC65i to the SIM.

<data>(str)

If <command>=136 (RUN GSM ALGORITHM):
16 byte random number.

<sw1>(num)

Status information from the SIM about the execution of the actual command. It is returned in both cases, on successful or failed execution of the command.

0...255

<sw2>(num)

Status information from the SIM about the execution of the actual command. It is returned in both cases, on successful or failed execution of the command.

0...255

<response>(str)

Response in case of a successful completion of the previously issued SIM command.

If <command>=136 (RUN GSM ALGORITHM):
TC65i returns SRES and cipher key Kc as calculated by the SIM.

Byte(s)	Description	Length
1 - 4	SRES - Signed RESponse	4
5 - 12	Kc - Cipher Key	8

Example

Use <command>=136 (RUN GSM ALGORITHM) to obtain SRES and cipher key Kc values as calculated by the SIM.

at^sxsm=136,,0,0,16,"00112233445566778899AABBCCDDEEFF" ^SXSM: 144,0,00112233445566778899AABB OK	Start SIM command "RUN GSM ALGORITHM" with 16 byte random number. SRES (bytes 1-4) and Cypher Key Kc (bytes 5-12) values as returned by the SIM.

14.5 AT^SCKS Query SIM and Chip Card Holder Status

This command controls the SIM connection presentation mode and queries the connection status of the SIM a nd the card holder tray of the TC65i.

Syntax

Test Command

```
AT^SCKS=?
```

Response(s)

```
^SCKS:(list of supported <mode>s)
OK
```

Read Command

```
AT^SCKS?
```

Response(s)

```
^SCKS: <mode>,<SimStatus>
OK
ERROR
+CME ERROR: <err>
```

Write Command

```
AT^SCKS=<mode>
```

Response(s)

```
OK
ERROR
+CME ERROR: <err>
```

PIN	ASC0	ASC1	USB	MUX1	MUX2	MUX3	Charge	✈	Last
-	+	+	+	+	+	+	-	+	-

Unsolicited Result Code

```
^SCKS: <SimStatus>
```

During startup, and if the TC65i's SIM connection status has changed an unsolicited result code (URC) is issued.

Command Description

The read command returns the URC presentation mode and the status of the SIM card connection.

The write command enables or disables the presentation of URCs to report whether or not the SIM card is connected.
If the ME is powered down or reset (AT+CFUN or AT^SMSO) the current presentation mode setting <mode> will not be retained. Therefore the setting <mode>=1 needs to be restored after power on the TC65i or may be saved in the user profile (AT&W).

Parameter Description

<mode>(num)(&W)(&V)	
0(&F)	Suppress unsolicited result codes
1	Output unsolicited result codes

<SimStatus>(num)(&V)	
0	Card holder tray removed or SIM connection error
1	SIM inserted(refer to note)

2	The SIM interface HW has been deactivated to prevent possible damage (e.g. if a SIM with invalid or unsupported electrical specifications has been detected). The SIM interface can be reactivated only with a restart of the module, e.g. with "AT+CFUN= n,1".

Note

- <SimStatus> reflects the status of the SIM and the card holder tray. Therefore if an empty SIM card tray is inserted, two URCs will be presented, indicating the status 1 followed by 0, i.e. a SIM is inserted into the card holder tray but no SIM connection could be established.

Example

AT^SCKS=1 OK	Activates the presentation of unsolicited result codes

Now, after inserting an empty card tray the following URCs appear:

^SCKS: 1	Tray connected
^SCKS: 0	No SIM card found

14.6 AT^SSET Indicate SIM data ready

After power-up and personalization (PIN entry if required) the ME starts reading data from SIM. The AT^SSET command controls the presentation of the "^SSIM READY" URC which indicates, on the corresponding serial channel, when the ME has finished reading SIM data. See Section 23.1, Restricted access to SIM data after SIM PIN authentication for further detail.

Syntax

Test Command

```
AT^SSET=?
```

Response(s)

```
^SSET: (list of supported <n>s)
OK
```

Read Command

```
AT^SSET?
```

Response(s)

```
^SSET: <n>
OK
ERROR
+CME ERROR: <err>
```

Write Command

```
AT^SSET=[<n>]
```

Response(s)

```
OK
ERROR
+CME ERROR: <err>
```

PIN	ASC0	ASC1	USB	MUX1	MUX2	MUX3	Charge	✈	Last
-	+	+	+	+	+	+	-	+	-

Unsolicited Result Code

^SSIM READY

The URC acknowledges to the user that SIM data is accessible.

Parameter Description

<n>(num)(&W)(&V)

URC presentation mode

0(&F)	Disable URC "^SSIM READY" indication.
1	Enable URC "^SSIM READY" indication.

14.7 AT^SCID Display SIM card identification number

Syntax

Test Command

```
AT^SCID=?
```

Response(s)

```
OK
```

Exec Command

```
AT^SCID
```

Response(s)

```
^SCID: <cid>
OK
ERROR
+CME ERROR: <err>
```

PIN	ASC0	ASC1	USB	MUX1	MUX2	MUX3	Charge	✈	Last
-	+	+	+	+	+	+	-	+	-

Command Description

TA returns the card identification number in SIM (SIM file EF_{ICCID}, see GSM 11.11 Chap.10.1.1) as string type.

Parameter Description

`<cid>`(str)

card identification number of SIM card

14.8 AT+CXXCID Display card ID

Syntax

Test Command

```
AT+CXXCID=?
```

Response(s)

```
OK
```

Exec Command

```
AT+CXXCID
```

Response(s)

```
+CXXCID: <cid>
OK
ERROR
+CME ERROR: <err>
```

PIN	ASC0	ASC1	USB	MUX1	MUX2	MUX3	Charge	✈	Last
-	+	+	+	+	+	+	-	+	-

Command Description

TA returns the card identification number in SIM (SIM file EF ICCID, see GSM 11.11 Chap.10.1.1) as string type.

Note

- See also: AT^SCID.

15. Remote SIM Access (RSA) Commands

This chapter contains AT commands and responses related to the Remote SIM Access (RSA) feature of TC65i. RSA allows TC65i to access and use a remote SIM card via its serial interface in addition to or instead of the SIM locally attached via the dedicated lines on the interface connector.

The necessary protocols and procedures are implemented following the "SIM Access Profile (SAP) Interoperability Specification" . As stated there it is possible for a SAP client to use a SIM card in an external device connected via a wireless link. The external device can either be a mobile phone, a PDA or any other mobile equipment that may be used as SIM card holder. The SIM Access Profile builds on the interface between the mobile equipment and the SIM card (refer to the "Specification of the Subscriber Identity Module (GSM 11.11)" [25]). For further details contact the Application Engineering Department at Cinterion Wireless Modules GmbH.

Figure 15.1, Basic Remote SIM Access Usage Scenario via Bluetooth illustrates an access scenario via Bluetooth:
Since the TC65i itself - acting as SAP client - does not control the Bluetooth wireless link, the communication with the remote SIM needs to be routed via an external customer application. The external application establishes and controls the Bluetooth connection. It maps data received over a serial interface channel to data transferred over a Bluetooth interface and vice versa.

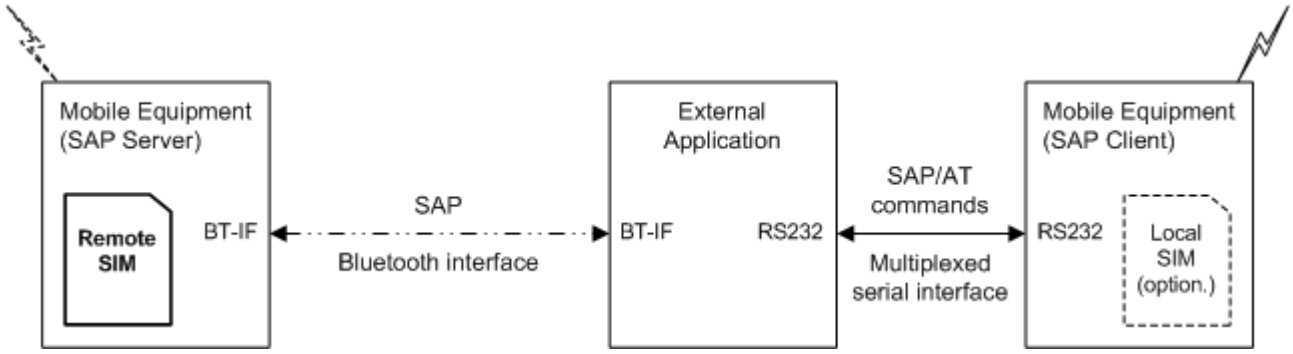

Figure 15.1: Basic Remote SIM Access Usage Scenario via Bluetooth

Figure 15.2, Basic Remote SIM Access usage scenario via RS232 illustrates an alternative access scenario via a serial RS232 interface: Instead of Bluetooth it is possible for an external customer application to use a serial RS232 interface in mapping data for the remote SIM in an external device. In this case an ASCII coded string format (XSAP by Cinterion Wireless Modules GmbH) is used instead of the binary SAP data format employed for Bluetooth.

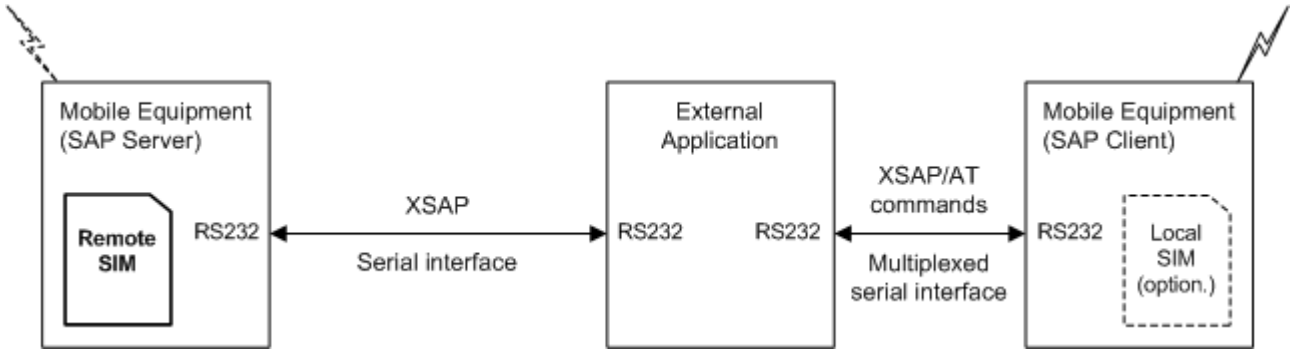

Figure 15.2: Basic Remote SIM Access usage scenario via RS232

The TC65i can operate either as SAP server or as SAP client. A brief description of the configuration is given below.

SAP server
The SAP server has direct (galvanic) access to a SIM. It acts as a SIM card reader which assists the SAP client in accessing and controlling this SIM via the serial link.
After RSA activation, the SAP server waits for SAP CONNECTION_REQ messages from the SAP client (see Figure 15.3, SIM usage states of SAP server). The SAP server still uses its local SIM card until the parameter negotiation with an SAP client has been accomplished successfully.

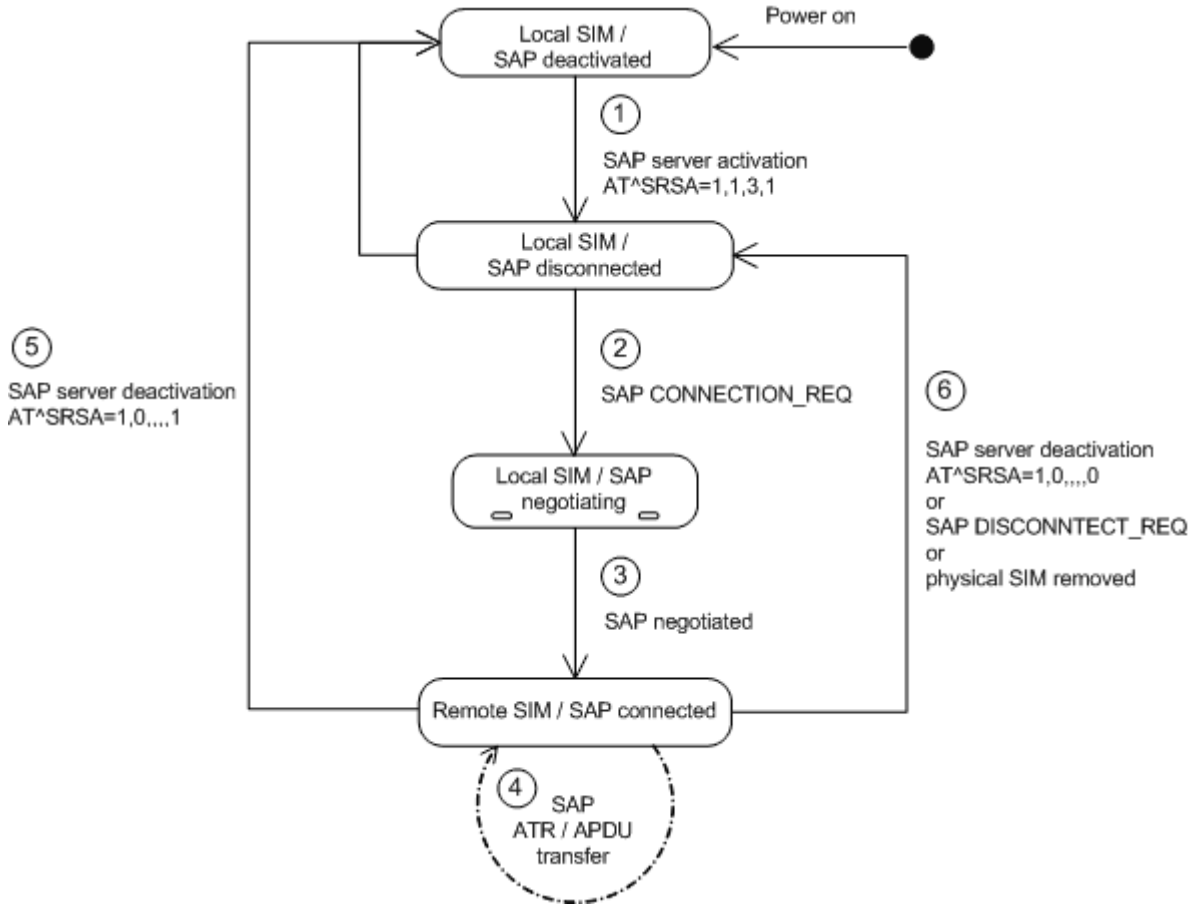

Figure 15.3: SIM usage states of SAP server

SAP client
After RSA activation, the SAP client starts sending SAP CONNECTION_REQ messages (see Figure 15.4, SIM usage states of SAP client). The SAP client still uses its local SIM until an SAP server responds and the parameter negotiation has been accomplished successfully. When the SAP client recognizes from the received ATR data that the SIM of the SAP server is appropriate and uses the correct transmission protocols, it switches over to the server's SIM. The "^SRSA: 2,2,1" URC notifies the SAP client that the server's SIM is accessible. Now, the SAP client can enter the SIM PIN of the server's SIM. Both sides start to exchange APDU data.
When the SIM PIN authentication has been completed, the SAP client can register to the cellular network - via the SIM inserted in the SAP server instead of its own local SIM.
As an additional option, the SAP client is advised to enable further URCs to get detailed status information during connection setup, such as the URCs "^SCKS" and "+CREG". See the example provided in Section 15.2, AT^SRSM.

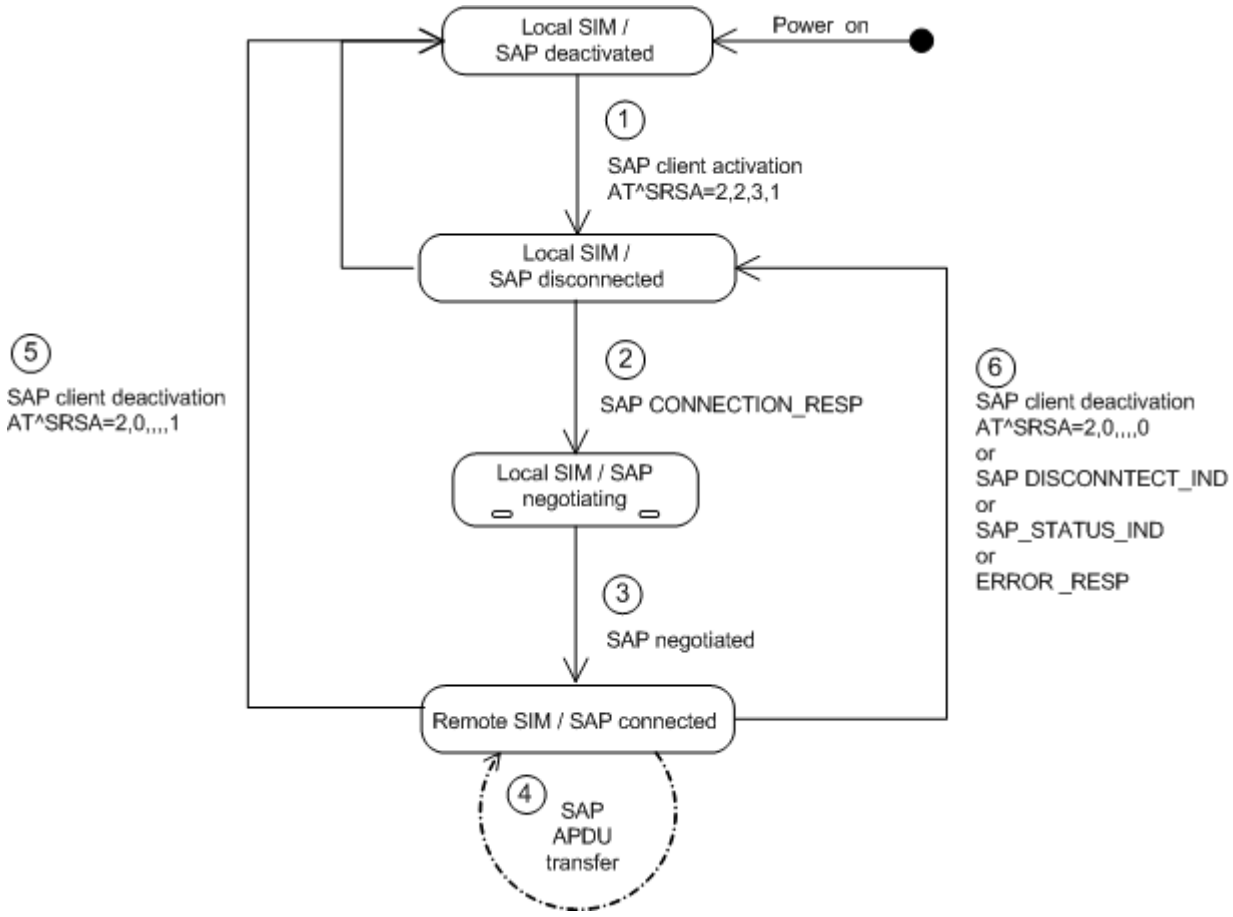

Figure 15.4: SIM usage states of SAP client

15.1 AT^SRSA Remote SIM Access Activation

The AT^SRSA write command enables and disables RSA connections and allows to control the TC65i's SIM usage scheme.
The AT^SRSA read command requests the current RSA status. Every line indicates an RSA connection, if any.

Syntax

Test Command

AT^SRSA=?

Response(s)

^SRSA: (list of supported <devId>s) , (list of supported <sapRole>s) , (list of supported <muxChan>s) , (list of supported <dataForm>s) , (list of supported <beaconPer>s) , (list of supported <discType>s)
OK

Read Command

AT^SRSA?

Response(s)

[^SRSA: <devId>, <sapRole>, <connState>, <muxChan>, <dataForm>, <beaconPer>]
OK

Write Command

AT^SRSA=<devId>, <sapRole>[, <muxChan>[, <dataForm>[, <beaconPer>[, <discType>]]]]

Response(s)

^SRSA: <actResult>
OK

PIN	ASC0	ASC1	USB	MUX1	MUX2	MUX3	Charge	✈	Last
-	+	+	+	+	+	+	-	-	-

Unsolicited Result Code

^SRSA: <devId>, <sapRole>, <connState>

This URC is generated if either the SIM usage scheme or the SAP connection status has changed due to SAP message communication or AT command control.

Parameter Description

<actResult>(num)

Activation result

0	No Error Parameters valid, SAP mode change initiated. However, actual mode change is signaled via URC "^SRSA". Other values indicate invalid activation requests, no SAP mode change is initiated in the following cases:
1	Error unspecified.
2	Error activation command is busy.
3	Error activation started with serial multiplex mode is off.
4	Error activation started on invalid serial multiplex channel.
5	Error device Id is already known.
6	Error SAP mode is already active.
7	Error invalid parameter.

`<devId>`(num)

Device identification

Arbitrary number assigned on RSA activation by the host. Used for all subsequent RSA communication (AT commands and URCs) during the activated session. Different numbers shall be used for SAP server and client.

1...100

`<sapRole>`(num)

SIM usage scheme of the TC65i

Direct switch from SAP server to SAP client mode and vice versa is not supported.

0(P)	Local SIM If this parameter value is used with write command meaning depends on parameter `<discType>`.
1	SAP server Enables Remote SIM Access and configures the TC65i as SAP server. The SAP server waits for CONNECT_REQ messages sent from the SAP client until the right `<MaxMsgSize>` is negotiated. Once the SAP client sends a CONNECT_REQ message with `<MaxMsgSize>` 276, the SAP server deregisters from the network and then acts as SIM card reader. However, under the following conditions the SAP server will not react to CONNECT_REQ messages: • during any calls (voice or data), • if a GPRS context is activated, • if Remote-SAT interface is activated (`AT^SSTA`) and a proactive command is ongoing.
2	SAP client Enables Remote SIM Access and configures the TC65i as SAP client. The SAP client starts sending CONNECT_REQ messages periodically, until the right `<MaxMsgSize>` is negotiated. The intervals between sending CONNECT_REQ messages are set with `<beaconPer>`. The SAP client deregisters from the network if a local SIM was used before and switches to the remote SIM after receiving all of the following messages from the SAP server: • the SAP message CONNECT_RESP, • the SAP message STATUS_IND • and, finally, the SAP message ATR_RESP received after the appropriate request was issued by the client. However, under the same conditions listed above for `<sapRole>`=1, the SAP client will not send CONNECT_REQ messages, nor will it switch to the remote SIM.

`<muxChan>`(num)

Serial multiplexer channel number

Logical channels 2 and 3 can be reserved for RSA traffic on serial interface multiplexer. Multiplex mode shall be enabled before RSA activation via `AT+CMUX`.
Note:
Number of multiplex channels is implementation specific, please refer to `AT+CMUX` and the multiplex documentation supplied with the TC65i. If for instance three logical channels are implemented these are referenced as numbers 1 - 3. The selected multiplexer channel is dedicated to the RSA communication. However, it is not possible to reserve logical channel number 1 for RSA traffic because only on this channel the TC65i can perform circuit switched data transfer, e.g. FAX or data calls. If no channel is specified the ME uses the channel on which the command was issued.

<dataForm>(num)

SAP message data format

[0]	XSAP ATC/URC format SAP messages are translated into ASCII coded strings and transmitted as parameters of the AT^SRSM command and the "^SRSM" URC. When using a Bluetooth modem with AT command interface for transmitting data, it is recommended to choose the XSAP data format. Note that AT commands not related to RSA shall not be used after RSA activation on the dedicated serial multiplexer channel.
1	SAP transparent binary format SAP messages are transmitted as coded in the SAP specification. This data format should be selected for transmitting SIM data to a Bluetooth stack which is part of the application. The binary data will be exchanged transparently with the ME. However, the SAP data format does not need ASCII character conversion. As a result less data will be transferred and the SIM communication will be faster.

<beaconPer>(num)

Beacon period

0...[6]...100	Specifies the number of seconds the SAP client waits before sending the next CONNECT_REQ message. A 0 value leads to a one-time connection request. This parameter is applicable for SAP client activation only.

<discType>(num)

SAP disconnection type

This parameter is only applicable if <sapRole> equals 0.
Calls or active GPRS contexts via a remote SIM will be lost due to missing SIM access. Use of AT+CLCC is recommended to query call states before RSA deactivation.

0	Hold SAP role SAP connection is going to be disabled. The TC65i remains in SAP mode and is ready to (re)establish an SAP connection. If an SAP connection was ongoing a URC "^SRSA: <devId>, <sapRole>, <connState>" with <connState>= 0 is issued. • A server exclusively sends an SAP message DISCONNECT_IND (type "Graceful") to the client. • A client saves the SIM data temporarily held in the TC65i's memory to the remote SIM and sends the DISCONNECT_REQ message to the server. If requested the client restarts sending CONNECTION_REQ messages. If a local SIM is attached the TC65i will use it to register to the network until a server offers its SIM again.
[1]	Stop SAP operation SAP connection is disabled and TC65i is forced to local SIM mode. A URC "^SRSA: <devId>, <sapRole>, <connState>" with <sapRole>= 0 and <connState>= 0 is issued. • A server sends a DISCONNECT_IND message (type "Immediate") to the client and returns to local SIM mode immediately. SIM data temporarily held in the client's memory would be lost. • A client exclusively sends the DISCONNECT_REQ message to the server. Without saving temporarily held data to a remote SIM or waiting for DISCONNECT_RESP the client immediately returns to local SIM mode.

<connState>(num)	
SAP connection state	
0	No SAP connection established.
1	SAP connection ongoing, i.e. peers exchange messages.

Notes

- If AT^SRSA with <dataForm> set to 1 (SAP) is given on the same serial multiplex channel as specified with parameter <muxChan> the SAP data transfer mode is entered immediately. Therefore no command response is issued by the TC65i in this case.
- If a TC65i acting as SAP client switches to a remote SIM card, it needs to load data from the SIM card first. The duration of the initial data load varies depending on the SIM card. Users should be aware that during this time SIM related AT commands (e.g. Phonebook or SMS commands) cannot be used. Therefore, it is recommended to activate the "^SSIM READY" which indicates when the SIM card is accessible. See AT^SSET for detail.
- If the TC65i is acting as SAP server and has released its SIM to a client it considers it as not accessible. Therefore AT commands which require SIM access will be rejected with "+CME ERROR: SIM not inserted".
- Parameters <muxChan>, <dataForm> and <beaconPer> are applicable for RSA activation only.

15.2 AT^SRSM Remote SIM Access Message

The AT^SRSM command is used to transfer SAP messages between devices acting as SAP server and client. It is applicable for XSAP data format only, for details please refer to the <dataForm> parameter of the AT^SRSA command. The write command transports SAP messages to an SAP server or SAP client.

Syntax

Test Command

AT^SRSM=?

Response(s)

OK

Write Command

AT^SRSM=<RsaDevId>, <RsaMsgId>[, <RsaMsgData>[, <RsaMsgLen>[, <RsaMsgRc>]]]

Response(s)

OK

PIN	ASC0	ASC1	USB	MUX1	MUX2	MUX3	Charge	✈	Last
-	+	-	+	+	+	+	-	-	-

Unsolicited Result Code

^SRSM: <RsaDevId>, <RsaMsgId>[, <RsaMsgData>[, <RsaMsgLen>[, <RsaMsgRc>]]]

This URC is issued by an ME acting as SAP server or client to transfer SAP message data.

Parameter Description

<RsaDevId>(num)

RSA device identification

Number assigned by the host on RSA activation via AT^SRSA, parameter <devId>.

<RsaMsgId>(num)

RSA message identification

For details refer to Section 15.2.1, SAP Request Message Parameters and Section 15.2.2, SAP Response Message Parameters.

<RsaMsgData>(str)

RSA message data

For details refer to Section 15.2.1, SAP Request Message Parameters and Section 15.2.2, SAP Response Message Parameters.

<RsaMsgLen>(num)

RSA message data length

For details refer to Section 15.2.1, SAP Request Message Parameters and Section 15.2.2, SAP Response Message Parameters.

<RsaMsgRc>(num)

RSA message result code

For details refer to Section 15.2.1, SAP Request Message Parameters and Section 15.2.2, SAP Response Message Parameters.

<MaxMsgSize>(num)

SAP parameter MaxMsgSize

Handling of this parameter is as follows:

- If the TC65i is acting as SAP client the requested value of <MaxMsgSize> is 300. During SAP connection setup this value may be negotiated with the server to the minimal value 274, which is calculated by 256 data bytes as part of a TRANSFER_APDU_RESP message plus a 16 byte SAP header and two status bytes. If the server does not accept this value range no SAP connection will be established.
- If the TC65i is acting as SAP server it requires that a <MaxMsgSize> value of 276 will be accepted by a connected client.

<ConnStatus>(num)

SAP parameter Connection Status

<DiscType>(num)

SAP parameter Disconnection Type

<CmdApdu>(str)

SAP parameter Command APDU or Command APDU7816

<CmdApduLen>(num)

SAP parameter Command APDU length

<RspApdu>(str)

SAP parameter Response APDU

<RspApduLen>(num)

SAP parameter Response APDU length

<ATR>(str)

SAP parameter ATR

<AtrLen>(num)

SAP parameter ATR length

<ResCode>(num)

SAP parameter Result Code

<CardRdStatus>(num)

SAP parameter Card Reader Status

<StatusChange>(num)

SAP parameter Status Change

<TransportProtocol>(num)

SAP parameter Transport Protocol

Example

The following example shows how to establish an RSA connection.

AT+CMEE=2	Switch on verbose error messages.
OK	
AT+CREG=1	
OK	Switch on network registration URC.
AT^SSET=1	Switch on SIM data ready URC.
OK	
AT^SCKS=1	Switch on SIM status URC.
OK	
AT^SM20=0	Switch on immediate indication of OK response after dialing with ATD.
OK	
AT^SRSA?	Does the ME support RSA and is a SAP connection established?
OK	
AT^SRSA=2,2,3,0	Initialization of RSA mode using XSAP data format.
^SRSA:0	
OK	
^SRSA:2,2,0	URC indicating SAP client start without ongoing connection. ME now starts sending SAP message CONNECTION_REQ on dedicated RSA channel. If an SAP server has responded and offers its SIM:
^SRSA:2,2,1	URC indicating a connection with SAP server.
^SCKS:0	URC indicating the loss of (local) SIM.
+CREG:0	URC indicating the deregistration from network because of loss of SIM.
^SCKS:1	URC indicating the activation of remote SIM. ME now starts reading data from the SIM. Does the new SIM require a PIN?
AT+CPIN?	Request PIN status.
+CPIN: SIM PIN	PIN needs to be entered.
OK	or
+CME ERROR: SIM blocked	or
+CME ERROR: SIM busy	Retry if the ME returns these messages.
AT+CPIN=1234	
OK	
+CREG:2	
+CREG:1	URC indicating network registration.
^SSIM READY	URC indicating that SIM data is read out.
ATD491777777777777	
OK	Make a call.

15.2.1 SAP Request Message Parameters

The table below shows all SAP request message parameters sent

- when an "^SRSM" URC is issued by an ME acting as SAP client
- and then the AT^SRSM write command is used to transfer data to the SAP server.

SAP Request Message Parameter Mapping:

Id	SAP Message Name	SAP parameter mapping to AT^SRSA parameters <RsaMsgId> [,<RsaMsgData> [,<RsaMsgLen> [,<RsaMsgRc>]]]
0	CONNECT_REQ	0,,<MaxMsgSize>
2	DISCONNECT_REQ	2
5	TRANSFER_APDU_REQ	5,<CmdApdu>,<CmdApduLen>
7	TRANSFER_ATR_REQ	7
9	POWER_SIM_OFF_REQ	9
11	POWER_SIM_ON_REQ	11
13	RESET_SIM_REQ	13
15	TRANSFER_CARD_READER _STATUS_REQ	15
19	SET_TRANSPORT_PROTOCOL_REQ	19,<TransportProtocol>

15.2.2 SAP Response Message Parameters

The table below shows all SAP response and indication message parameters sent when

- an "^SRSM" URC is issued by an ME acting as SAP server
- and then the AT^SRSM write command is used to transfer data to the SAP client.

SAP Response Message Parameter Mapping:

Id	SAP Message Name	SAP parameter mapping to AT^SRSA parameters <RsaMsgId> [,<RsaMsgData> [,<RsaMsgLen> [,<RsaMsgRc>]]]
1	CONNECT_RESP	1,,<MaxMsgSize>,<ConnStatus>
3	DISCONNECT_RESP	3
4	DISCONNECT_IND	4,,,<DiscType>
6	TRANSFER_APDU_RESP	6,<RspApdu>,<RspApduLen>,<ResCode>
8	TRANSFER_ATR_RESP	8,<ATR>,<AtrLen>,<ResCode>
10	POWER_SIM_OFF_RESP	10,,,<ResCode>
12	POWER_SIM_ON_RESP	12,,,<ResCode>
14	RESET_SIM_RESP	14,,,<ResCode>
16	TRANSFER_CARD_READER _STATUS_RESP	16,,<CardRdStatus>,<ResCode>
17	STATUS_IND	17,,,<StatusChange>
18	ERROR_RESP	18
20	SET_TRANSPORT_PROTOCOL_RESP	20,,,<ResCode>

15.3 Related AT Commands

The following commands might be of interest while using the RSA feature.

- AT^SCKS
  This AT command is used to check the current status of the SIM (local or remote).
- AT^SSET
  After power on and personalization (PIN entry if required), the ME starts reading data from the SIM. Please keep in mind that after entering the PIN, even after the TE sends "OK", subsequent commands that need access to data stored on the SIM may be blocked for up to 30 seconds. It may take even longer to access the remote SIM depending on the establishment of the RSA communication link. Therefore, it is recommended to take advantage of the "^SSIM READY" URC enabled with the AT^SSET command. This URC notifies the user when the process of reading SIM has completed. Afterwards all commands regarding to SIM data files can be used, e.g. the SMS and phonebook commands.
- AT^SLCC
  This command is recommended for querying the state of current calls. A list of all active calls will be returned. This is especially important when the user wants to terminate the SAP connection using AT^SRSA=<devId>,<sapRole>,,,,<discType>; with <sapRole> set to 0 and <discType> set to 1. All calls or active GPRS contexts established via remote SIM will be terminated and the ME will use the locally attached SIM card.
- AT^SIND="simlocal",1
  "+CIEV" "simlocal" URCs indicate the availability of a locally (i.e. physically) connected SIM.
- AT^SIND="simstatus",1
  "+CIEV" "simstatus" URCs indicate the current status of a locally (i.e. physically) or remotely connected SIM.
- SIM data storage
  It is recommended that all user relevant data are stored on the SIM only. For example, added phonebook and SMS entries in the client's storage are not accessible after a RSA connection.

15.3.1 Establishing an RSA Connection in a PC Environment

To set up an RSA connection in a PC environment an appropriate PC application is needed. For test and evaluation purposes and as exemplary implementation guidance Cinterion Wireless Modules offers a PC application called "ComBridge". For ordering details contact your local dealer. "ComBridge" provides basic features to simulate an RSA application environment, e.g. mapping of the SAP communication between a SAP server and client. To support the different RSA coding modes (SAP and XSAP) and to transfer data between the two COM ports, the PC application uses two variable modules (filters):

- XSAP filter
  Translating the "^SRSM" URCs into the AT^SRSM command
- SAP filter
  Transparently transfer binary SAP messages. The generic "1:1" filter ("software null modem") can also be used for this purpose, but communication might be slower since it performs bytewise data transfer.

15.3.2 Bluetooth scenario (SAP)

A connection between a TC65i operating as an SAP client and a device that supports Bluetooth and SIM Access profile requires:

a) System requirements

- Windows 2000, Windows XP (or later) installed
- USB Bluetooth dongle. The driver of the dongle must allow connections to Bluetooth profiles which are not yet specified by the SIG, e.g. SAP.

b) Installation procedure

- After installing the USB Bluetooth dongle and the "PlugFree" driver software, the Bluetooth profiles are accessible via their own virtual COM port.
- If the WinMux driver has been installed another three virtual channels (mapped to additional COM ports) are available. The physical Multiplexer COM port is connected to the TC65i.
- Start the Bluetooth connection using the driver provided by the USB Bluetooth dongle.
- Through "ComBridge", one virtual COM port supplied by "WinMux" is connected to the SAP COM port of "PlugFree". This establishes a direct communication link between the TC65i and the other mobile. However, take into account that AT commands can still be entered on the remaining multiplexer channels of the TC65i.
- Select the "ComBridge" SAP filter.
- Press the "ComBridge-Start" button to connect both mobiles.
- Start the SAP client using the AT command "AT^SRSA=2,2,3,1", if multiplexer channel 3 is used.

15.3.3 Serial Interface Scenario (XSAP)

This example describes the connection of two mobiles. It is recommended that the instructions be followed in the order that they are presented:

- Install two WinMux drivers on the PC and connect each ME to the physical port of a Multiplexer.
- Connect the PC application "ComBridge" to one virtual COM port of each Multiplexer. This establishes a communication link between the two mobiles. Bear in mind that AT commands can still be issued on both mobiles using the remaining serial channels.
- Select the "ComBridge" XSAP filter.
- Open the XSAP "Config Filter" menu and deactivate the "Startup - Send Initialization" and the "Shutdown - Switch back to local SIM" tags. However, the appropriate device IDs need to be entered in the "Startup" frame.
- Press the "ComBridge - start" button to connect both MEs.
- Start the SAP client via AT command "AT^SRSA=2,2,3,0", if multiplexer channel 3 is used.
- Start the SAP server via AT command "AT^SRSA=1,1,3,0", if multiplexer channel 3 is used.

15.3.4 RSA Connection via Java application

Remote SIM access is not supported by the module’s Java implementation. Please do not use RSA AT commands in your Java applications.

16. SIM Application Toolkit (SAT) Commands

This chapter offers a brief reference to AT commands and responses related to the TC65i's SIM Application Toolkit (SAT) implementation. A consistent and detailed description can be found in the "Remote-SAT User's Guide" [4]. For further advice please contact the Application Engineering Department at Cinterion Wireless Modules GmbH.

ETSI specification GSM 11.14 [26] defines SAT in detail.

SIM Application Toolkit (SAT) is a technology that allows an application running on the SIM to control the Mobile Equipment (ME). Remote-SAT (RSAT) provides a link between applications located on the SIM and a customer application (TA). The purpose of RSAT is to allow the TA to send AT commands to the SAT interface and to display all SAT activities on the user interface of the customer application.

Two groups of commands are exchanged between the SAT located on the TC65i and the SIM Application running on the SIM:

- Proactive commands are sent from the SIM application to the TC65i's SAT, such as "DISPLAY TEXT".
- Envelope commands are sent from the TC65i's SAT to the SIM application, such as "MENU SELECTION".

16.1 AT^SSTA SAT Interface Activation

The AT^SSTA write command can be used to specify the Remote-SAT activation mode <mode> and, if Explicit Response mode is enabled, to explicitly activate the Remote SAT interface. Removing and inserting the SIM does not affect the activation status.
SAT commands which are not using the AT interface (non MMI related SAT commands, e.g. PROVIDE LOCAL INFORMATION) are executed without activating Remote-SAT.
The read command canbe used to request the current operating status and the used alphabet of the Remote-SAT interface.

Syntax

Test Command

AT^SSTA=?

Response(s)

^SSTA:(list of supported <state>s), (list of supported <Alphabet>s)
OK

Read Command

AT^SSTA?

Response(s)

^SSTA: <state>, <Alphabet>, <allowedInstance>, <SatProfile>
OK

Write Command

AT^SSTA=<mode>[, <Alphabet>]

Response(s)

OK

PIN	ASC0	ASC1	USB	MUX1	MUX2	MUX3	Charge	✈	Last
-	+	+	+	+	+	+	-	+	-

Reference(s)

CINTERION

Parameter Description

<state>(num)

TC65i Remote-SAT interface states

0	RESET
1	OFF
2	IDLE
3	PAC
4	WAIT

<Alphabet>(num)

Parameter is stored non-volatile and takes effect after next restart of the ME.

0(D)	GSM character set Input of a character requests one byte, e.g. "Y".
1	UCS2 To display the 16 bit value of characters represented in UCS2 alphabet a 4 byte string is required, e.g. "0059" is coding the character "Y". For details please refer to ISO/IEC 10646.

<allowedInstance>(num)

0	SAT is already used on another instance (logical channel in case of the multiplex protocol). Only test and read commands can be used.
1	SAT may be started on this instance via the write version of this command.

<SatProfile>(str)

SAT profile according to GSM 11.14 [26]
The profile tells the SIM Application which features (e.g. proactive commands) are supported by the SIM Application Toolkit implementation of the TC65i.

<mode>(num)

Select Remote SAT activation mode.
Parameter is stored non-volatile and takes effect after next restart of the ME. Removing and inserting the SIM does not affect the activation status.

0(D)	Automatic response (AR) mode. All commands and responses are exchanged automatically between the ME and the SIM application. This eliminates the need to enter any Remote SAT AT commands incl. the AT^SSTA command. If AR mode is enabled the ME enters the OFF state (<state>=1) after reboot.
1	Explicit response (ER) mode. This mode is intended for use with an MMI. If ER mode is enabled the MMI is required to handle, via the module's Remote-SAT interface, all commands and responses transmitted to or from the SIM. If ER mode is enabled the ME enters the IDLE state (<state>= 2) after reboot.

16.2 ^SSTN SAT Notification

Unsolicited Result Codes

URC 1

Proactive Command notification

^SSTN: <cmdType>

Every time the SIM Application issues a Proactive Command, via the ME, the TA will receive a notification. This indicates the type of Proactive Command issued.
AT^SSTGI must then be used by the TA to request the parameters of the Proactive Command from the ME. Upon receiving the ^SSTGI response from the ME, the TA must send AT^SSTR to confirm the execution of the Proactive Command and provide any required user response, e.g. a selected menu item.

URC 2

Terminate Proactive Command notification

^SSTN: <cmdTerminateValue>

When the SIM application has issued a Proactive Command to the ME, it is possible that this command will be terminated later. URC "^SSTN" is sent with a different Proactive Command type number (added terminate offset 100) to indicate the termination of the specified command.
The state changes to idle. Therefore the TA should avoid sending any further commands related to the terminated Proactive Command, e.g. AT^SSTGI or AT^SSTR.

URC 3

Notification that SIM Application has returned to main menu

^SSTN: 254

Notification to the TA when the SIM Application has finished a command cycle and again enters its main menue, which was transferred with an URC "^SSTN: 37" (SET UP MENU) at start up.
This URC should be used to open this menue on the sreen.
The TA does not need to respond directly, i.e. AT^SSTR is not required.

URC 4

SIM reset notification

^SSTN: 255

Notification to the TA if a Proactive Command "REFRESH - SIM Reset" has been issued by the SIM Application, please refer to AT^SSTGI.
This URC should be used to set the TAs application to its initial state since the SIM Application will start from the beginning, too.
The TA does not need to respond directly, i.e. related AT^SSTGI and AT^SSTR are neither required nor allowed.
Since the ME is still busy on SIM access the ME may respond with "+CME ERROR: SIM blocked" or "+CME ERROR: SIM busy" on following PIN required AT Commands for a while. Then TA shall retry until the ME responds with "OK". The time needed for this process depends on the SIM and may take more than 10 seconds.

Parameter Description

<cmdType>(num)

Proactive Command number

<cmdTerminateValue>(num)

Defined as <cmdType> + terminate offset. The terminate offset equals 100.

16.3 AT^SSTGI SAT Get Information

Regularly this command is used upon receipt of an URC "^SSTN" to request the parameters of the Proactive Command.
Then the TA is expected to acknowledge the AT^SSTGI response with AT^SSTR to confirm that the Proactive Command has been executed. AT^SSTR will also provide any user information, e.g. a selected menu item.
The Proactive Command type value specifies to which "^SSTN" the command is related.

Syntax

Test Command

```
AT^SSTGI=?
```

Response(s)

```
^SSTGI:(list of supported <state>s), (list of supported <cmdType>s)
OK
```

Read Command

```
AT^SSTGI?
```

Response(s)

```
^SSTGI: <state>,<cmdType>
OK
```

Write Command

```
AT^SSTGI=<cmdType>
```

Response(s)

```
OK
ERROR
+CME ERROR: <err>
```

PIN	ASC0	ASC1	USB	MUX1	MUX2	MUX3	Charge	✈	Last
-	+	+	+	+	+	+	-	+	-

Reference(s)

CINTERION

Parameter Description

<state>(num)

TC65i Remote-SAT interface states

0	RESET
1	OFF
2	IDLE
3	PAC
4	WAIT

<cmdType>(num)

Related Proactive Command

16.4 AT^SSTR SAT Response

The TA is expected to acknowledge the AT^SSTGI response with AT^SSTR to confirm that the Proactive Command has been executed. AT^SSTR will also provide any user information, e.g. a selected menu item.

Syntax

Test Command

AT^SSTR=?

Response(s)

^SSTR: (list of supported <state>s), (list of supported <cmdType>s)
OK

Read Command

AT^SSTR?

Response(s)

^SSTR: <state>, <cmdType>
OK

Write Command

AT^SSTR=<cmdType>, <status>[, <inputNumber>][, <inputString>][, <statAddInfo>]

Response(s)

OK

PIN	ASC0	ASC1	USB	MUX1	MUX2	MUX3	Charge	✈	Last
-	+	+	+	+	+	+	-	+	-

Reference(s)

CINTERION

Parameter Description

<state>(num)

TC65i Remote-SAT interface states

0	RESET
1	OFF
2	IDLE
3	PAC
4	WAIT

<cmdType>(num)

Number related to Proactive Command or event type according to GSM 11.14 [26].

<status>(num)

Command status return regarding the type of action that has taken place, e.g. action performed by the user. Values are in accordance with GSM 11.14 [26].

<inputNumber>(num)

Response number entered by user

<inputString>(str)

Response string entered by user

<statAddInfo>(num)

Optional additional command status; for possible values refer to GSM 11.14 [26].

17. Phonebook Commands

The AT commands described in this chapter allow the external application to access the phonebooks located in the TC65i's memory or on the attached Subscriber Identity Module (SIM).

17.1 Sort Order for Phonebooks

Due to the support of UCS2 for the <text> part of phonebook entries, the sort order for phonebook records follows the algorithm published as Unicode Technical Standard #10, "Unicode Collation Algorithm".
A memory-optimized version of the proposed collation tables "[AllKeys]" from Unicode Technical Standard #10 is used in order to determine collation weights for Code points between 0000 and 06FF, and composed keys are used for Code points from ranges 0700 to 33FF, A000 to D7FF and E000 to FFFD. Code Points not referenced in these tables will be assigned a default collation weight with their unicode value as level 1 weight. Decomposition is not supported.
Phonebook entries whose names contain only characters from the GSM07.07 default alphabet are converted internally into their UCS2 equivalents in order to achieve consistent sorting results.

For the user, this means that:

- Punctuation marks and other non-alphabetical characters from the common latin-based character sets, and from the standard GSM character set, will be sorted before any alphabetical characters. The ordering in which these marks appear as compared to other non-alphabetical characters from the same group is determined by their collation weights and does not reflect their code values in the UCS2 or GSM alphabet tables above. Please refer to www.unicode.org for detail.
- Alphabetical characters from the common latin-based character sets, and from the standard GSM character set, will be sorted according to their underlying base characters, plus the collation weights of their accent signs.
- Only collation levels 1 and 2 are regarded, so sorting is not case-sensitive.

Example: the european letters "Å" (GSM 0EH, UCS2 00C5h), "æ" (GSM 1DH, UCS2 00E6h), "ç" (GSM09h, UCS2 00E7h), "a" (GSM 61H, UCS2 0061h) and "b" (GSM 62H, UCS2 0062h) will be sorted in order "a", "Å", "æ" "b","ç" although their numerical values in GSM and UCS2 suggest a different ordering.

17.2 AT+CNUM Read own numbers

AT+CNUM returns the subscribers own number(s) from the SIM.

Syntax

Test Command
AT+CNUM=?
Response(s)
OK

Exec Command
AT+CNUM
Response(s)
[+CNUM: [<alpha>], <number>, <type>] [+CNUM: ...] OK ERROR +CME ERROR: <err>

PIN	ASC0	ASC1	USB	MUX1	MUX2	MUX3	Charge	✈	Last
+	+	+	+	+	+	+	-	+	-

Reference(s)
GSM 07.07

Parameter Description

<alpha>(str)

Optional alphanumeric string associated with <number>.

<number>(str)

Phone number in format specified by <type>.

<type>(str)

Type of address octet, see also: AT+CPBR <type>.

Note

- Users should be aware that when using this AT command quickly after SIM PIN authentication the SIM data may not yet be accessible, resulting in a short delay before the requested AT command response is returned. See Section 23.1, Restricted access to SIM data after SIM PIN authentication for further detail.

17.3 AT+CPBR Read from Phonebook

AT+CPBR serves to read one or more entries from the phonebook selected with AT command AT+CPBS.

The AT+CPBR test command returns the location range supported by the current phonebook storage, the maximum length of <number> field and the maximum length of <text> field.
Note: Length information may not be available while SIM storage is selected. If storage does not offer format information, the format list contains empty parenthesizes.

The AT+CPBR write command determines the phonebook entry to be displayed with <location1> or a location range from <location1> to <location2>. Hence, if no <location2> is given only the entry at <location1> will be displayed.
If no entries are found at the selected location "OK" will be returned.

Syntax

Test Command

```
AT+CPBR=?
```

Response(s)

```
+CPBR: (1-<maxloc>), <nlength>, <tlength>
OK
ERROR
+CME ERROR: <err>
```

Write Command

```
AT+CPBR=<location1>[, <location2>]
```

Response(s)

```
[+CPBR: <location1>, <number>, <type>, <text>]
[+CPBR: <location2>, <number>, <type>, <text>]
OK
ERROR
+CME ERROR: <err>
```

PIN	ASC0	ASC1	USB	MUX1	MUX2	MUX3	Charge	✈	Last
+	+	+	+	+	+	+	-	+	-

Reference(s)

GSM 07.07, GSM 11.11

Parameter Description

<location1>(num)

The first (lowest) location number within phonebook memory where to start reading. The maximum range supported by the current phonebook is given in the test command response.
If <location1> exceeds the upper bound <maxloc> (as indicated by the test command), command will respond with "+CME ERROR: invalid index".

<location2>(num)

The last (highest) location number within phonebook memory where to stop reading. The maximum range supported by the current phonebook is given in the test command response.
If both <location1> and <location2> are in the range indicated by the test command parameter <maxloc>, the list of entries will be output and terminated with "OK".
If <location2> exceeds the range indicated by the test command parameter <maxloc>, the list of entries will be output but terminated with "+CME ERROR: invalid index".
Note: The maximum value of <location2> is 255, regardless of the phonebook type and its range indicated by <maxloc>. If a value greater than 255 is used the query returns no phonebook records, and only "+CME ERROR: invalid index" is shown.

<number>(str)

Phone number in format specified by <type>, it may be an empty string.

<type>(num)

Type of address octet, which defines the used type of number (ton) and the numbering plan identification (npi). Please consider that for types other than 129 or 145 dialing from phonebook with ATD><mem><n> is, depending on the network, not always possible (refer to GSM 04.08 subclause 10.5.4.7 for details). See also <type> of AT+CPBW.
Possible values are:

145	Dialing string <number> includes international access code character '+'
161	National number. Network support of this type is optional.
209	Dialing string <number> has been saved as ASCII string and includes non-digit characters other than "*", "#" or "+". Note that phonebook entries saved with this type cannot be dialed.
255	Dialing string <number> is a command to control a Supplementary Service, i.e. "*", "#" codes are contained. Network support of this type is optional.
129	Otherwise

<text>(str)(+CSCS)

Text assigned to a phone number. The maximum length for this parameter is given with test command response parameter <tlength>.
If using an ASCII terminal characters which are coded differently in ASCII and GSM have to be entered via escape sequences as described in Section 1.6, Supported character sets.

<maxloc>(num)

Maximum location number for the currently selected storage. For phonebooks located on the SIM this value depends on the SIM card type.

<nlength>(num)

Maximum length of phone number for "normal" locations. Depending on the storage a limited number of locations with extended memory is available per phonebook. These locations allow storing numbers with twice the standard length, which is 2*<nlength> digits for normal numbers, but only <nlength> digits for numbers saved with <type>=209.

<tlength>(num)

Maximum length of <text> assigned to the telephone number. The value indicated by the test command is given in octets. If <text> is given as GSM characters each character corresponds to one octet. If the <text> string is given in UCS2, the maximum number of characters depends on the coding scheme used for the alpha field of the SIM according to GSM 11.11, Annex B [25]. In the worst case the number of UCS2 characters is at least one less than half the number of GSM characters.

Note

- Users should be aware that when using this AT command quickly after SIM PIN authentication the SIM data may not yet be accessible, resulting in a short delay before the requested AT command response is returned. See Section 23.1, Restricted access to SIM data after SIM PIN authentication for further detail.

Example

`AT+CPBR=?`	First run the AT+CPBR test command to find out the maximum range of entries stored in the active phonebook.
`+CPBR:(1-100),20,17`	TC65i returns the supported values, where 100 is the supported range of location numbers, 20 is the length of the phone number and 17 is the maximum length of the associated text.

`AT+CPBR =1,3`
`+CPBR:1,"+999999",145,"Charlie"`
`+CPBR:2,"+777777",145,"Bill"`
`+CPBR:3,"+888888",145,"Arthur"`
	Then use the AT+CPBR write command to display the phonebook entries sorted by location numbers.

17.4 AT+CPBS Select phonebook memory storage

AT+CPBS selects the active phonebook storage, i.e. the phonebook storage that all subsequent phonebook commands will be operating on.
The read command returns the currently selected <storage>, the number of <used> entries and the <total> number of entries available for this storage. The test command returns all supported <storage>s as compound value.

Syntax

Test Command

```
AT+CPBS=?
```

Response(s)

```
+CPBS: (list of supported <storage>s)
OK
ERROR
+CME ERROR: <err>
```

Read Command

```
AT+CPBS?
```

Response(s)

```
+CPBS: <storage>, <used>, <total>
OK
ERROR
+CME ERROR: <err>
```

Write Command

```
AT+CPBS=<storage>
```

Response(s)

```
OK
ERROR
+CME ERROR: <err>
```

PIN	ASC0	ASC1	USB	MUX1	MUX2	MUX3	Charge	✈	Last
+	+	+	+	+	+	+	-	+	-

Reference(s): GSM07.07

Parameter Description

<storage>(str)

"FD"	Fixed dialing phonebook Capacity: depending on SIM Location: SIM
"SM"(&F)(P)	SIM phonebook Capacity: depending on SIM Location: SIM
"ON"	MSISDN list Capacity: depending on SIM Location: SIM
"ME"	Mobile Equipment Phonebook Capacity: max. 250 entries Location: ME

“LD“	Last number dialed phonebook. Stores all voice call numbers dialed with ATD, but no data call numbers. Capacity: max. 10 entries Location: ME AT+CPBW command is not applicable to this storage. The LD list can be deleted with AT^SDLD or with AT^SPBD.
“MC“	Missed (unanswered received) calls list Capacity: max. 10 entries Location: ME AT+CPBW command is not applicable to this storage. The MC list can be deleted with AT^SPBD.
“RC“	Received calls list Capacity: max. 10 entries Location: ME AT+CPBW command is not applicable to this storage. The RC list can be deleted with AT^SPBD.
“VM“	CPHS voice mailbox phonebook Capacity: 1 or 2 entries, depending on SIM 1 - Line 1 mailbox 2 - Line 2 mailbox Location: SIM

<used>(num)

Value indicating the number of used locations in selected memory storage.

<total>(num)

Value indicating the maximum number of locations allowed in the selected memory storage.

Notes

- Users should be aware that when using this AT command quickly after SIM PIN authentication the SIM data may not yet be accessible, resulting in a short delay before the requested AT command response is returned. See Section 23.1, Restricted access to SIM data after SIM PIN authentication for further detail.
- If the SIM card is changed, all records of the "MC", "RC" and "LD" phonebooks stored on the ME will be deleted automatically. If the same SIM is removed and reinserted, no automatic deletion is performed. Calls made after last switch-on will be cleared from the "MC", "RC" and "LD" phonebook, if the SIM is removed and reinserted during normal operation.
- The following call history rule applies to the phonebook types "LD", "MC" and "RC":
  When the same number is dialed several times in direct succession the "LD" phonebook will store one single entry. When dialed several times, but in a row with different numbers, the same number will be logged each time after dialing, resulting in double or multiple "LD" phonebook entries related to this number.
  The optional <text> in AT+CPBW write command must be stored in any phonebook when reading the <text> with AT+CPBR write command in the "LD" phonebook after having dialed with ATD or another dial command.
  Likewise, the "MC" or "RC" phonebook will store only a single entry when calls from the same number are received in direct succession, and double or multiple entries when calls from the same number are received several times, but amongst other incoming calls from different numbers.

17.5 AT+CPBW Write into Phonebook

The AT+CPBW write command can be used to create, edit and delete a phonebook entry at a <location> of the active storage selected with AT+CPBS.
If <storage>="FD" (SIM fixed dialing numbers) is selected, PIN2 authentication has to be performed prior to any write access.

The AT+CPBW test command returns the location range supported by the current storage, the maximum length of the <number> field, the range of supported <type> values and the maximum length of the <text> field. Note: The length may not be available while SIM storage is selected. If storage does not offer format information, the format list contains empty parenthesizes.

Syntax

Test Command

```
AT+CPBW=?
```

Response(s)

```
+CPBW: (1-<maxloc>), <nlength>, (list of supported <type>s), <tlength>
OK
ERROR
+CME ERROR: <err>
```

Write Command

```
AT+CPBW=[<location>][, <number>[[, <type>][, <text>]]]
```

Response(s)

```
OK
ERROR
+CME ERROR: <err>
```

PIN	ASC0	ASC1	USB	MUX1	MUX2	MUX3	Charge	✈	Last
+	+	+	+	+	+	+	-	+	-

Reference(s)

GSM 07.07, GSM 04.08

Parameter Description

<location>(num)

Location number within phonebook memory. The maximum range supported by each storage type is indicated in the test command response. If <location> is not given, the first free entry will be used.
If <location> is given as the only parameter, the phonebook entry specified by <location> is deleted.

<number>(str)

Phone number in format specified by <type>. Parameter must be present, although it may be an empty string. Alphabetic characters are not permitted. <number> may contain dialstring modifiers "*", "#" or "+".
If other printable non-alphabetic characters are used the entry needs to be saved with <type>=209. Otherwise, if <type>=209 is not used any non-digit characters other than "*", "#" or "+" will be removed from the string and only accepted modifiers from the GSM alphabet will be saved.
A <number> saved with <type>=209 requires double memory. In order to fit into a standard location, the number needs to be reduced to a maximum length of <nlength>/2, including all digits and dial string modifiers. Extended locations may be used as stated below for <nlength>.

<type>(num)

Type of address octet, which defines the used type of number (ton) and the numbering plan identification (npi). Please consider that for types other than 129 or 145 dialing from phonebook with ATD><mem><n> is, depending on the network, not always possible (refer GSM 04.08 subclause 10.5.4.7 for details).
If <type> is not specified the unknown <type>=129 is used. If <number> contains a leading "+" <type>=145 (international) is used.
Supported values are:

145	Dialing string <number> includes international access code character "+"
161	National number. The network support for this type is optional.
209	Dialing string <number> will be saved as ASCII string. This is the default value, if <type> is not specified explicitly and characters other than "*", "#" or "+" are included in <number>. Note that phonebook entries saved with this type cannot be dialed.
255	Dialing string <number> is a command to control a Supplementary Service, i.e. "*", "#" codes are contained. Network support of this type is optional.
129	Unknown number. If <type> is unknown and the <number> contains a leading "+", <type>=145 (international) is used.

<text>(str)(+CSCS)

Text assigned to the phone number. The maximum length of this parameter is given in the test command response <tlength>. When using an ASCII terminal, characters which are coded differently in ASCII and GSM have to be entered via escape sequences as described in Section 1.6, Supported character sets.

<maxloc>(num)

Maximum number of locations supported by the currently selected storage. For phonebooks located on SIM, this value varies depending on the SIM card. See AT+CPBS for typical values.

<nlength>(num)

Maximum length of phone number for "normal" locations. Depending on the storage, a limited number of locations with extended memory is available per phonebook. These locations allow storing numbers with twice the standard length, which is 2*<nlength> digits for normal numbers, but only <nlength> digits for numbers saved with parameter <type>= 209. If all extended locations of the selected phonebook are used up, then any attempt to write a number which requires extended memory will be denied with "+CME ERROR: invalid dial string".

<tlength>(num)

Maximum length of <text> assigned to the telephone number. The value indicated by the test command is given in octets. If the <text> string is given in GSM characters, each character corresponds to one octet. If the <text> string is given in UCS2, the maximum number of characters depends on the coding scheme used for the alpha field of the SIM. In the worst case the number of UCS2 characters is at least one less than half the number of GSM characters.
For a detailed description please refer to GSM 11.11, Annex B [25].

Notes

- Users should be aware that when using this AT command quickly after SIM PIN authentication the SIM data may not yet be accessible, resulting in a short delay before the requested AT command response is returned. See Section 23.1, Restricted access to SIM data after SIM PIN authentication for further detail.
- During AT+CPBW write command it is possible that in some cases returns "+CME ERROR: operation temporary not allowed". Use AT+CPBW write command again.

Examples

EXAMPLE 1

Make a new phonebook entry at the first free location

```
AT+CPBW=,"+431234567",145,"international"
```

EXAMPLE 2

Delete entry at location 1

```
AT+CPBW=1
```

EXAMPLE 3

The following examples are provided to illustrate the effect of writing phonebook entries with different types of dial string modifiers in <number>

```
AT+CPBW=5,"12345678",,"Arthur"
AT+CPBW=6,"432!+-765()&54*654#",,"John"
AT+CPBW=7,"432!+-765()&54*654#",129,"Eve"
AT+CPBW=8,"432!+-765()&54*654#",145,"Tom"
AT+CPBW=9,"432!+-765()&54*654#",209,"Richard"
```

EXAMPLE 4

Read phonebook entries from locations 5 - 9 via AT+CPBR

```
+CPBR:5,"12345678",129,"Arthur"
+CPBR:6,"432!+-765()&54*654#",209,"John"
+CPBR:7,"432+76554*654#",129,"Eve"
+CPBR:8,"+432+76554*654#",145,"Tom"
+CPBR:9,"432!+-765()&54*654#",209,"Richard"
```

17.6 AT^SPBW Write into Phonebook with location report

The AT^SPBW write command can be used to create, edit and delete a phonebook entry at a <location> of the active storage selected with AT+CPBS. After having written the phonebook entry <location> is shown.
If <storage>="FD" (SIM fixed dialing numbers) is selected, PIN2 authentication has to be performed prior to any write access.

The AT^SPBW test command returns the location range supported by the current storage, the maximum length of the <number> field, the range of supported <type> values and the maximum length of the <text> field. Note: The length may not be available while SIM storage is selected. If storage does not offer format information, the format list contains empty parenthesizes.

Syntax

Test Command

```
AT^SPBW=?
```

Response(s)

```
^SPBW: (1-<maxloc>), <nlength>, (list of supported <type>s), <tlength>
OK
ERROR
+CME ERROR: <err>
```

Write Command

```
AT^SPBW=[<location>][, <number>[[, <type>][, <text>]]]
```

Response(s)

```
^SPBW: <location>
OK
ERROR
+CME ERROR: <err>
```

PIN	ASC0	ASC1	USB	MUX1	MUX2	MUX3	Charge	✈	Last
+	+	+	+	+	+	+	-	+	-

Reference(s)

GSM 07.07, GSM 04.08

Parameter Description

<location>(num)

Location number within phonebook memory. The maximum range supported by each storage type is indicated in the test command response. If <location> is not given, the first free entry will be used.
If <location> is given as the only parameter, the phonebook entry specified by <location> is deleted.

<number>(str)

Phone number in format specified by <type>. Parameter must be present, although it may be an empty string. Alphabetic characters are not permitted. <number> may contain dialstring modifiers "*", "#" or "+".
If other printable non-alphabetic characters are used the entry needs to be saved with <type>=209. Otherwise, if <type>=209 is not used any non-digit characters other than "*", "#" or "+" will be removed from the string and only accepted modifiers from the GSM alphabet will be saved.
A <number> saved with <type>=209 requires double memory. In order to fit into a standard location, the number needs to be reduced to a maximum length of <nlength>/2, including all digits and dial string modifiers. Extended locations may be used as stated below for <nlength>.

<type>(num)

Type of address octet, which defines the used type of number (ton) and the numbering plan identification (npi). Please consider that for types other than 129 or 145 dialing from phonebook with ATD><mem><n> is, depending on the network, not always possible (refer GSM 04.08 subclause 10.5.4.7 for details).
If <type> is not specified the unknown <type>=129 is used. If <number> contains a leading "+" <type>=145 (international) is used.
Supported values are:

145	Dialing string <number> includes international access code character "+"
161	National number. The network support for this type is optional.
209	Dialing string <number> will be saved as ASCII string. This is the default value, if <type> is not specified explicitly and characters other than "*", "#" or "+" are included in <number>. Note that phonebook entries saved with this type cannot be dialed.
255	Dialing string <number> is a command to control a Supplementary Service, i.e. "*", "#" codes are contained. Network support of this type is optional.
129	Unknown number. If <type> is unknown and the <number> contains a leading "+", <type>=145 (international) is used.

<text>(str)(+CSCS)

Text assigned to the phone number. The maximum length of this parameter is given in the test command response <tlength>. When using an ASCII terminal, characters which are coded differently in ASCII and GSM have to be entered via escape sequences as described in Section 1.6, Supported character sets.

<maxloc>(num)

Maximum number of locations supported by the currently selected storage. For phonebooks located on SIM, this value varies depending on the SIM card. See AT+CPBS for typical values.

<nlength>(num)

Maximum length of phone number for "normal" locations. Depending on the storage, a limited number of locations with extended memory is available per phonebook. These locations allow storing numbers with twice the standard length, which is 2*<nlength> digits for normal numbers, but only <nlength> digits for numbers saved with parameter <type>= 209. If all extended locations of the selected phonebook are used up, then any attempt to write a number which requires extended memory will be denied with "+CME ERROR: invalid dial string".

<tlength>(num)

Maximum length of <text> assigned to the telephone number. The value indicated by the test command is given in octets. If the <text> string is given in GSM characters, each character corresponds to one octet. If the <text> string is given in UCS2, the maximum number of characters depends on the coding scheme used for the alpha field of the SIM. In the worst case the number of UCS2 characters is at least one less than half the number of GSM characters.
For a detailed description please refer to GSM 11.11, Annex B [25].

Notes

- Users should be aware that when using this AT command quickly after SIM PIN authentication the SIM data may not yet be accessible, resulting in a short delay before the requested AT command response is returned. See Section 23.1, Restricted access to SIM data after SIM PIN authentication for further detail.
- During AT^SPBW write command it is possible that in some cases returns "+CME ERROR: operation temporary not allowed". Use AT^SPBW write command again.

Examples

EXAMPLE 1

Make a new phonebook entry at the first free location (here location 3)

```
AT^SPBW=,"+431234567",145,"international"
^SPBW: 3
```

EXAMPLE 2

Delete entry at location 3

```
AT^SPBW=3
```

EXAMPLE 3

The following examples are provided to illustrate the effect of writing phonebook entries with different types of dial string modifiers in <number>

```
AT^SPBW=5,"12345678",,"Arthur"
^SPBW: 5
AT^SPBW=6,"432!+-765()&54*654#",,"John"
^SPBW: 6
AT^SPBW=7,"432!+-765()&54*654#",129,"Eve"
^SPBW: 7
AT^SPBW=8,"432!+-765()&54*654#",145,"Tom"
^SPBW: 8
AT^SPBW=9,"432!+-765()&54*654#",209,"Richard"
^SPBW: 9
```

EXAMPLE 4

Read phonebook entries from locations 5 - 9 via AT+CPBR

```
+CPBR:5,"12345678",129,"Arthur"
+CPBR:6,"432!+-765()&54*654#",209,"John"
+CPBR:7,"432+76554*654#",129,"Eve"
+CPBR:8,"+432+76554*654#",145,"Tom"
+CPBR:9,"432!+-765()&54*654#",209,"Richard"
```

17.7 AT^SDLD Delete the 'last number redial' memory

AT^SDLD deletes all numbers stored in the "LD" memory.

Syntax

Test Command
AT^SDLD=?
Response(s)
OK

Exec Command
AT^SDLD
Response(s)
OK ERROR +CME ERROR: <err>

PIN	ASC0	ASC1	USB	MUX1	MUX2	MUX3	Charge	✈	Last
+	+	+	+	+	+	+	-	+	-

Note

- Users should be aware that when using this AT command quickly after SIM PIN authentication the SIM data may not yet be accessible, resulting in a short delay before the requested AT command response is returned. See Section 23.1, Restricted access to SIM data after SIM PIN authentication for further detail.

17.8 AT^SPBC Find first matching entry in sorted phonebook

The AT^SPBC write command searches the current phonebook for the index number of the first (lowest) entry that matches the character specified with <schar>. The AT^SPBC test command returns the list of phonebooks which can be searched through with AT^SPBC.
CAUTION: Please note that AT^SPBC is assigned the same index as AT^SPBG or AT^SPBS which is not identical with the physical location numbers used in the various phonebooks. Therefore, do not use the index numbers retrieved with AT^SPBC to dial out or modify phonebook entries.

Syntax

Test Command

```
AT^SPBC=?
```

Response(s)

```
^SPBC: "FD","SM","ME"
OK
ERROR
+CME ERROR: <err>
```

Write Command

```
AT^SPBC=<schar>
```

Response(s)

```
^spbc: <index>
OK
ERROR
+CME ERROR: <err>
```

PIN	ASC0	ASC1	USB	MUX1	MUX2	MUX3	Charge	✈	Last
+	+	+	+	+	+	+	-	+	-

Parameter Description

<schar>(str)

First character of the entry to be searched in the sorted list of phonebook entries.

<index>(num)

In the active phonebook, the first (lowest) index number of an entry beginning with <schar>. As stated above, the retrieved index number shall not be used to dial out or edit phonebook entries. If no matching phonebook entry is found, <index>=0 will be returned.

Note

- Users should be aware that when using this AT command quickly after SIM PIN authentication the SIM data may not yet be accessible, resulting in a short delay before the requested AT command response is returned. See Section 23.1, Restricted access to SIM data after SIM PIN authentication for further detail.

17.9 AT^SPBD Purge phonebook memory storage

AT^SPBD can be used to purge the selected phonebook <storage> manually, i.e. all entries stored in the selected phonebook storage will be deleted. CAUTION! The operation cannot be stopped nor reversed!
The AT^SPBD test command returns the list of phonebooks which can be deleted with AT^SPBD.
An automatic purge of the phonebooks is performed when the SIM card is removed and replaced with a different SIM card. This affects the ME based part of the "LD" storage, and storages "MC" and "RC". Storage "ME" is not affected.

Syntax

Test Command

AT^SPBD=?

Response(s)

^SPBD: list of supported <storage>s
OK
ERROR
+CME ERROR: <err>

Write Command

AT^SPBD=<storage>

Response(s)

OK
ERROR
+CME ERROR: <err>

PIN	ASC0	ASC1	USB	MUX1	MUX2	MUX3	Charge	✈	Last
+	+	+	+	+	+	+	-	+	-

Parameter Description

<storage>(str)

If test command: List of phonebooks which can be deleted by AT^SPBD.
If write command: Phonebook to be deleted.
For a detailed description of storages see AT+CPBS.

“LD“	Last number dialed phonebook
“MC“	Missed (unanswered received) calls list
“RC“	Received calls list

Note

- Users should be aware that when using this AT command quickly after SIM PIN authentication the SIM data may not yet be accessible, resulting in a short delay before the requested AT command response is returned. See Section 23.1, Restricted access to SIM data after SIM PIN authentication for further detail.

17.10 AT^SPBG Display phonebook entries in alphabetical order

AT^SPBG sorts the entries of the current phonebook in alphabetical order by name (the first six characters matter). The sort order is described in Section 17.1, Sort Order for Phonebooks.
There are two ways to use AT^SPBG:

- If the optional parameter <RealLocReq> equals 0 or is omitted the sorted entries will be sequentially numbered. As these numbers are not identical with the location numbers stored in the various phonebooks AT^SPBG can be used for reading only. For example, it helps you find entries starting with matching characters. Do not use the serial numbers to dial out or modify entries.
- If parameter <RealLocReq>=1 is given by the write command, the response parameter <location> additionally appended to each entry indicates the actual location number. This number can be used for editing with AT+CPBW or dialing with ATD><mem><n>. The first index number of each entry is only the serial number of the sorted list.

Before using the AT^SPBG write command it is recommended to query the number of records currently stored in the active phonebook (refer to test command parameter <used>). The test command also includes the parameters <nlength> and <tlength>. Note that if SIM storage is selected the length may not be available. If storage does not offer format information, the format list should be empty parentheses.

Syntax

Test Command

```
AT^SPBG=?
```

Response(s)

```
^SPBG: (1-<used>), <nlength>, <tlength>
OK
ERROR
+CME ERROR: <err>
```

Write Command

```
AT^SPBG=<index1>[, <index2>][, <RealLocReq>]
```

Response(s)

```
[^SPBG: <index1>, <number>, <type>, <text>[, <location>]]
[^SPBG: <index2>, <number>, <type>, <text>[, <location>]]
OK
ERROR
+CME ERROR: <err>
```

PIN	ASC0	ASC1	USB	MUX1	MUX2	MUX3	Charge	✈	Last
+	+	+	+	+	+	+	-	+	-

Parameter Description

<index1>(num)

First index number in the sorted list where to start reading. The supported range is given in the test command response.
If <index 1> exceeds the upper bound <used>, "+CME ERROR: invalid index" will be returned.

<index2>(num)

Last index number in the sorted list where to stop reading. The supported range is given in the test command response.
If <index2> is not given via write command, only the entry located at <index1> will be displayed.
If both <index1> and <index2> are in the range indicated by the test command parameter <used>, the list of entries will be output and terminated with OK.
If <index2> exceeds the range indicated by the test command parameter <used>, the list of entries will be

output but terminated with a "+CME ERROR: invalid index".
Note: The maximum value of <index2> is 255, regardless of the phonebook type and its range indicated by the parameter <used>. If a value greater than 255 is used the query returns no phonebook records, and only "+CME ERROR: invalid index" is shown.

<RealLocReq>(num)

Is a display of the "real" <location> of the entry required?

[0]	Do not show an entry's "real" location number. Parameter <location> will not be displayed.
1	Show the "real" location number as parameter <location> at the end of each entry.

<number>(str)

String type phone number in format specified by <type>.
The number parameter may be an empty string.

<type>(num)

Type of address octet, which defines the used type of number (ton) and the numbering plan identification (npi). Please consider that for types other than 129 or 145 dialing from phonebook with ATD><mem><n> is, depending on the network, not always possible (refer to GSM 04.08 subclause 10.5.4.7 for details). See also <type> of AT+CPBW.
Possible values are:

145	Dialing string <number> includes international access code character '+'
161	National number. Network support of this type is optional.
209	Dialing string <number> has been saved as ASCII string and includes non-digit characters other than "*", "#" or "+". Note that phonebook entries saved with this type cannot be dialed.
255	Dialing string <number> is a command to control a Supplementary Service, i.e. "*", "#" codes are contained. Network support of this type is optional.
129	Otherwise

<text>(str)(+CSCS)

Text assigned to the phone number. The maximum length for this parameter is given in test command response <tlength>.

<used>(num)

Value indicating the number of used locations in selected memory storage.

<location>(num)

The location within phonebook memory at which the corresponding entry is located.
This location may be used for other commands (e.g. AT+CPBR or ATD><mem><n>)

<nlength>(num)

Maximum length of phone number for "normal" locations. Depending on the storage, a limited number of locations with extended memory is available per phonebook. Please refer to AT command AT+CPBW for detail.

<tlength>(num)

Maximum length of <text> assigned to the telephone number. The value indicated by the test command is given in octets. If the <text> string is given in GSM characters, each character corresponds to one octet. If the <text> string is given in UCS2, the maximum number of characters depends on the coding scheme used for the alpha field of the SIM according to GSM 11.11, Annex B [25]. In the worst case the number of UCS2 characters is at least one less than half the number of GSM characters.

Notes

- The command can be used for the phonebooks "SM", "FD", "ME" (cf. AT+CPBS).
- Users should be aware that when using this AT command quickly after SIM PIN authentication the SIM data may not yet be accessible, resulting in a short delay before the requested AT command response is returned. See Section 23.1, Restricted access to SIM data after SIM PIN authentication for further detail.

Examples

EXAMPLE 1

Using AT^SPBG without <RealLocReq>:

AT^SPBG=?	First run the AT^SPBG test command to find out the range of entries stored in the current phonebook.
^SPBG: (1-33),20,17	TA returns the range, where 33 is the number of entries stored in the current phonebook.
AT^SPBG=1,33 ^SPBG:1,"+999999",145,"Arthur" ^SPBG:2,"+777777",145,"Bill" ^SPBG:3,"+888888",145,"Charlie"	Now, enter the write command. To obtain best results it is recommended to query the full range of entries. TA returns phonebook entries in alphabetical order.

The numbers at the beginning of each line are not the memory locations in the phonebook, but only serial numbers assigned to the entries' positions in the alphabetical list.

EXAMPLE 2

Using AT^SPBG with <RealLocReq>:

AT^SPBG=?	First run the AT^SPBG test command to find out the range of entries stored in the current phonebook.
^SPBG: (1-33),20,17	TA returns the range, where 33 is the number of entries stored in the current phonebook.
AT^SPBG=1,33,1 ^SPBG:1,"+999999",145,"Arthur",27 ^SPBG:2,"+777777",145,"Bill",6 ^SPBG:3,"+888888",145,"Charlie",15	Now, enter the write command including parameter <RealLocReq>=1 to get the actual location numbers.

The numbers at the end of each line are the memory locations in the phonebook and can be used for dialing or editing phonebook entries:

AT+CPBR=27 +CPBR: 27,"+999999",145,"Arthur"	Read out phonebook location 27. This entry can be edited with AT+CPBW or used for dialing with ATD><mem><n>.

17.11 AT^SPBS Step through the selected phonebook alphabetically

AT^SPBS can be used to scroll sequentially through the active phonebook records in alphabetical order by na me. Three entries will be displayed at a time.

Every time the write command is executed, 3 rows of phonebook records are returned. Each triplet overlaps with the next one. The actual index depends on parameter <value>. This parameter determines whether the index will be increased or decreased.
If the index in one output line reaches the last index in the alphabetical list, the next output line will display the first list entry.
After the last record of the phonebook has been reached (see parameter <used> for AT^SPBG), the <internal-counter> switches over to the first.
There are two ways to use AT^SPBS:

- If the optional parameter <RealLocReq> is omitted or (0) the sorted entries will be sequentially numbered. As these numbers are not identical with the location numbers stored in the various phonebooks AT^SPBS can be used for reading only. For example, it helps you find entries starting with matching characters. Do not use the serial numbers to dial out or modify entries.
- If parameter <RealLocReq>=1 is given by the write command, the response parameter <location> additionally appended to each entry indicates the actual location number. This number can be used for editing with AT+CPBW or dialing with ATD><mem><n>. The first index number of each entry is only the serial number of the sorted list.

See examples below.

Syntax

Test Command

```
AT^SPBS=?
```

Response(s)

```
^SPBS: (list of supported <value>)
OK
```

Write Command

```
AT^SPBS=<value>[, <RealLocReq>]
```

Response(s)

```
^SPBS: <index-a>, <number>, <type>, <text>[, <location>]
^SPBS: <index-b>, <number>, <type>, <text>[, <location>]
^SPBS: <index-c>, <number>, <type>, <text>[, <location>]
OK
ERROR
+CME ERROR: <err>
```

PIN	ASC0	ASC1	USB	MUX1	MUX2	MUX3	Charge	✈	Last
+	+	+	+	+	+	+	-	+	-

Parameter Description

<value>(num)	
1	To make a step forward in the alphabetically sorted phonebook.
2	To make a step backward in the alphabetically sorted phonebook.

<index-a>(num)	
1...maxindex	The index in the sorted list of phonebook entries that identifies the first entry displayed. The value of <index-a> is determined by the value of the <internal-counter> and by parameter <value>.

After a write command has terminated successfully with "OK", the value from parameter <index-a> is saved and retained as the new <internal-counter> value.
Mind after the last record of phonebook, the first entry follows.

<index-b>(num)

1...maxindex — The index in the sorted list of phonebook entries that identifies the second entry displayed.
<index-b>= (<index-a>+1).
Mind after the last record of phonebook, the first entry follows.

<index-c>(num)

1...maxindex — The index in the sorted list of phonebook entries that identifies the third entry displayed.
<index-c>= (<index-b>+1).
Mind after the last record of phonebook, the first entry follows.

<number>(str)

String type phone number in format specified by <type>.
the number parameter may be an empty string.

<type>(num)

Type of address octet, which defines the used type of number (ton) and the numbering plan identification (npi). Please consider that for types other than 129 or 145 dialing from phonebook with ATD><mem><n> is, depending on the network, not always possible (refer to GSM 04.08 subclause 10.5.4.7 for details). See also <type> of AT+CPBW.
Possible values are:

145 — Dialing string <number> includes international access code character '+'

161 — National number. Network support of this type is optional.

209 — Dialing string <number> has been saved as ASCII string and includes non-digit characters other than "*", "#" or "+". Note that phonebook entries saved with this type cannot be dialed.

255 — Dialing string <number> is a command to control a Supplementary Service, i.e. "*", "#" codes are contained. Network support of this type is optional.

129 — Otherwise

<text>(str)(+CSCS)

Text assigned to the phone number.

<RealLocReq>(num)

Is a display of the "real" <location> of the entry required?

[0] — Do not show an entry's "real" location number. Parameter <location> will not be displayed

1 — Show the "real" location number as parameter <location> at the end of the entry

<location>(num)

The location within phonebook memory at which the corresponding entry is located.
This location may be used for other phonebook commands (e.g. AT+CPBR, AT+CPBW, ATD><mem><n>).

<internal-counter>(num)	
0(&F)...maxindex	This parameter is only an internal parameter and cannot modified directly. The internal counter will be reset to index 0 after a call to ATZ or AT&F.

Notes

- The complete list of sorted entries can be retrieved using AT command AT^SPBG.
- The command can be used for the phonebooks "SM", "FD", "ME" (cf. AT+CPBS).
- Users should be aware that when using this AT command quickly after SIM PIN authentication the SIM data may not yet be accessible, resulting in a short delay before the requested AT command response is returned. See Section 23.1, Restricted access to SIM data after SIM PIN authentication for further detail.

Examples

EXAMPLE 1

This example illustrates how to search down and up again using AT^SPBS=1 and 2:

```
at&f                                    First, AT&F is issued to make sure that AT^SPBS=1
OK                                      starts from the first character in alphabetical order.
at^spbs=1
^SPBS:1,"+999999",145,"Arthur"
^SPBS:2,"+777777",145,"Bill"
^SPBS:3,"+888888",145,"Charlie"

OK
at^spbs=1
^SPBS:2,"+777777",145,"Bill"
^SPBS:3,"+888888",145,"Charlie"
^SPBS:4,"0304444444",129,"Esther"

OK
at^spbs=1
^SPBS:3,"+888888",145,"Charlie"
^SPBS:4,"0304444444",129,"Esther"
^SPBS:5,"03033333333",129,"Harry"

OK
at^spbs=2
^SPBS:2,"+777777",145,"Bill"
^SPBS:3,"+888888",145,"Charlie"
^SPBS:4,"0304444444",129,"Esther"

OK
```

EXAMPLE 2

This example shows that when the last index in the sorted list has been reached, the internal counter overflows to the first index.

```
at&f                                    Reset internal counter to 0.
OK
at^spbs=2                               Step down one entry starting from (internal
^SPBS:33,"+49301234567",145,"TomTailor" counter)=0 - overflow occurs.
^SPBS:1,"+999999",145,"Arthur"
^SPBS:2,"+777777",145,"Bill"

OK
```

EXAMPLE 3

Using AT^SPBS with <RealLocReq>=1 in order to obtain the entries' location numbers:

```
at^spbs=1,1

^SPBS:1,"+999999",145,"Arthur",27
^SPBS:2,"+777777",145,"Bill",6
^SPBS:3,"+888888",145,"Charlie",15
```

The numbers at the end of each line are the memory locations in the phonebook and can be used for dialing or editing phonebook entries:

`at+cpbr=27` `+CPBR: 27,"+999999",145,"Arthur"`	Read out phonebook location 27. This entry can be edited with AT+CPBW or used for dialing with ATD><mem><n>.

18. Audio Commands

The AT Commands described in this chapter are related to the TC65i's audio interface.

18.1 Audio programming model

The following figure illustrates how the signal path can be adjusted with the parameters <inCalibrate>, <inBbcGain>, <outBbcGain>, <outCalibrate> and <sideTone> as well as <io>, <mic> and <ep>.

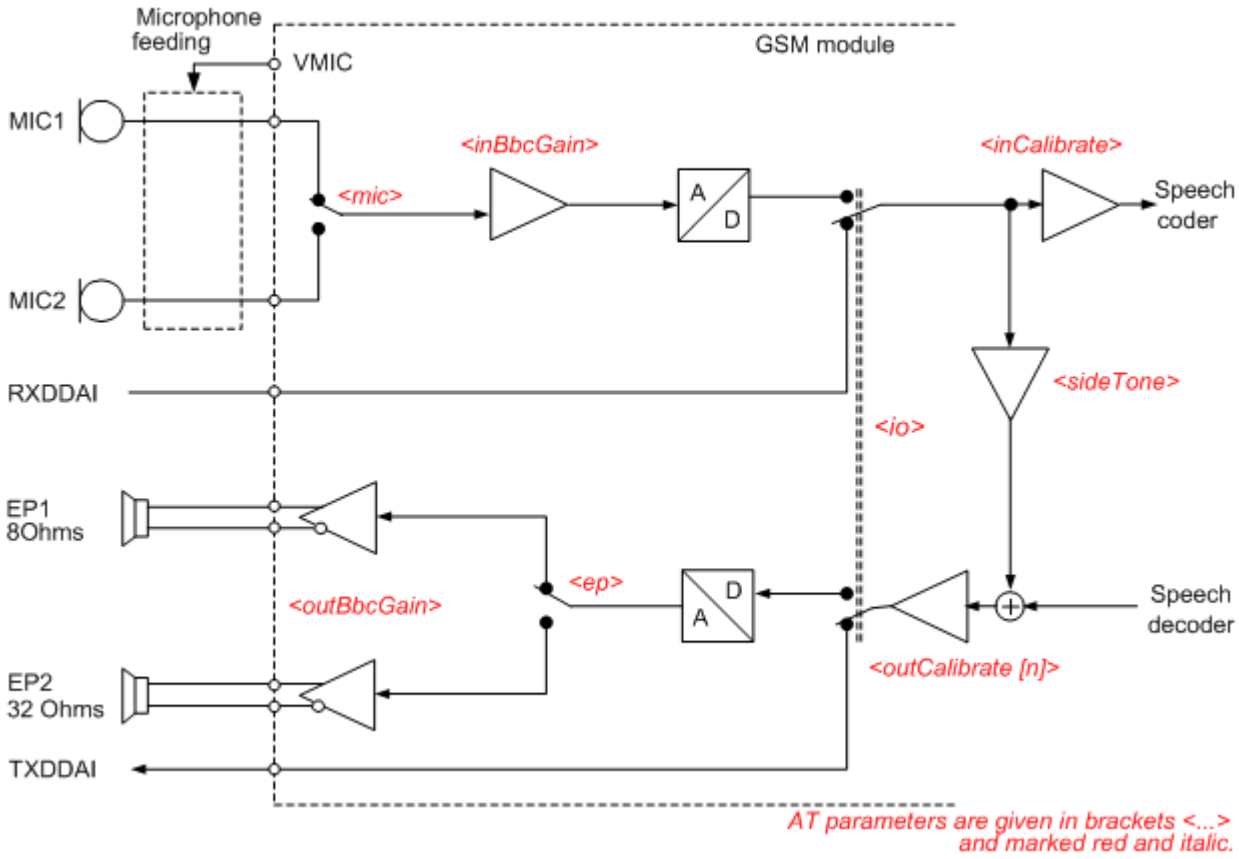

Figure 18.1: Audio programming model for TC65i Module

18.2 ATL Set monitor speaker loudness

ATL is implemented for V.250ter compatibility reasons only, and has no effect. In multiplex mode (refer AT+CMUX) the command is supported on logical channel 1 only.

Syntax

Exec Command
ATL[<val>]
Response(s)
OK

PIN	ASC0	ASC1	USB	MUX1	MUX2	MUX3	Charge	✈	Last
-	+	-	-	+	-	-	-	+	-

Reference(s)
V.250

Parameter Description

<val>(num)

18.3 ATM Set monitor speaker mode

ATM is implemented for V.250ter compatibility reasons only, and has no effect. In multiplex mode (refer AT+CMUX) the command is supported on logical channel 1 only.

Syntax

Exec Command
ATM[<val>]
Response(s)
OK

PIN	ASC0	ASC1	USB	MUX1	MUX2	MUX3	Charge	✈	Last
-	+	-	-	+	-	-	-	+	-

Reference(s)
V.250

Parameter Description

<val>(num)

18.4 AT+CLVL Loudspeaker volume level

Syntax

Test Command

AT+CLVL=?

Response(s)

+CLVL: (list of supported<level>s)
OK

Read Command

AT+CLVL?

Response(s)

+CLVL: <level>
OK
ERROR
+CME ERROR: <err>

Write Command

AT+CLVL=<level>

Response(s)

OK
ERROR
+CME ERROR: <err>

PIN	ASC0	ASC1	USB	MUX1	MUX2	MUX3	Charge	✈	Last
-	+	+	+	+	+	+	-	+	-

Reference(s)

GSM 07.07

Parameter Description

<level>(num)

Loudspeaker Volume Level

0...4(D)

Notes

- The write command can only be used in audio mode 2 - 6.
- The values of the volume steps are specified with the parameters <outCalibrate>[0],...<outCalibrate>[4] of the AT^SNFO command.
- As an alternative to AT+CLVL, you can use AT^SNFO and AT^SNFV. The parameter <level> is identical with <outStep> used by both commands.
- Any change to <level> (or <outStep>) takes effect in audio modes 2 to 6. That is, when you change <level> (or <outStep>) and then select another mode with AT^SNFS, the same step will be applied. The only exception is audio mode 1 which is fixed to <level>=4 (or accordingly <outStep>=4).
- <level> (or <outStep>) is stored non-volatile when the ME is powered down with AT^SMSO or reset with AT+CFUN=1,1.

18.5 AT+CMUT Mute control

The AT+CMUT command mutes the microphone input. The command can be used in all audio modes (1 to 6) and during a voice call only. See AT^SNFS for more details on the various audio modes. As alternative, you can use the AT^SNFM command.
During an active call, users should be aware that when they switch back and forth between different audio modes (for example handsfree on/off) the value of <mute> does not change, i.e. the microphone mode is retained until explicitly changed.

Syntax

Test Command

```
AT+CMUT=?
```

Response(s)

```
+CMUT: (list of supported<mute>s)
OK
```

Read Command

```
AT+CMUT?
```

Response(s)

```
+CMUT: <mute>
OK
ERROR
+CME ERROR: <err>
```

Write Command

```
AT+CMUT=<mute>
```

Response(s)

```
OK
ERROR
+CME ERROR: <err>
```

PIN	ASC0	ASC1	USB	MUX1	MUX2	MUX3	Charge	✈	Last
-	+	+	+	+	+	+	-	+	-

Reference(s)

GSM 07.07

Parameter Description

<mute>(num)

0(P)	Mute off
1	Mute on

18.6 AT+VTD Tone duration

This command refers to an integer <duration> that defines the length of tones transmitted with the AT+VTS command.

Syntax

Test Command

AT+VTD=?

Response(s)

+VTD: (list of supported<duration>s)
OK

Read Command

AT+VTD?

Response(s)

<duration>
OK
ERROR
+CME ERROR: <err>

Write Command

AT+VTD=<duration>

Response(s)

OK
ERROR
+CME ERROR: <err>

PIN	ASC0	ASC1	USB	MUX1	MUX2	MUX3	Charge	✈	Last
-	+	+	+	+	+	+	-	-	-

Reference(s)

GSM 07.07

Parameter Description

<duration>(num)

Duration of the DTMF signal in 1/10 seconds with tolerance.
The minimum duration of DTMF signals is 300ms.

1(&F)(P)...255

18.7 AT+VTS DTMF and tone generation

AT+VTS is intended to send ASCII characters or strings which cause the Mobile Switching Center (MSC) to transmit DTMF tones to a remote subscriber. The command can only be used during active voice calls and offers the following variants:

- AT+VTS=<dtmfString> allows to send a sequence of DTMF tones with a duration defined with AT+VTD.
- AT+VTS=<dtmf>[,<duration>] allows to send a single DTMF tone. In this case, the duration can be individually determined during the call.

Syntax

Test Command

AT+VTS=?

Response(s)

+VTS: (list of supported<dtmf>s), (list of supported<duration>s)
OK

Write Command

AT+VTS=<dtmfString>

Response(s)

OK
ERROR
+CME ERROR: <err>

Write Command

AT+VTS=<dtmf>[, <duration>]

Response(s)

OK
ERROR
+CME ERROR: <err>

PIN	ASC0	ASC1	USB	MUX1	MUX2	MUX3	Charge	✈	Last
-	+	+	+	+	+	+	-	-	-

Reference(s)

GSM 07.07

Parameter Description

<dtmfString>(str)

String of ASCII characters in the set 0-9,#,*,A, B, C, D. Maximal length of the string is 29. The string must be enclosed in quotation marks ("...").

<dtmf>(str)

ASCII character in the set 0...9,#,*, A, B, C, D.

<duration>(num)

Tone duration in 1/10 seconds with tolerance. If not specified current setting of AT+VTD is used.
The minimum duration of DTMF signals is 300ms.

1...255

18.8 AT^SAIC Audio Interface Configuration

AT^SAIC configures the interface connections of the active audio mode. The write command is usable in audio modes 2 to 6 only.
If AT^SNFS=1, any attempt to use AT^SAIC write command is rejected with error response. This is because all default parameters in audio mode 1 are determined for type approval and are not adjustable.
To allocate a specific audio mode to one of the audio interfaces, first select the audio mode with AT^SNFS and then choose the interface using AT^SAIC.

Syntax

Test Command

```
AT^SAIC=?
```

Response(s)

```
^SAIC:(list of supported <io>s), (list of supported<mic>s), (list of supported<ep>s), (list of supported<clock>s), (list of supported<mode>s), (list of supported<frame_mode>s)
OK
```

Read Command

```
AT^SAIC?
```

Response(s)

```
^SAIC: <io>, <mic>, <ep>, <clock>, <mode>, <frame_mode>
OK
ERROR
+CME ERROR: <err>
```

Write Command

```
AT^SAIC=<io>[, <mic>[, <ep>][, <clock>, <mode>, <frame_mode>]]
```

Response(s)

```
OK
ERROR
+CME ERROR: <err>
```

PIN	ASC0	ASC1	USB	MUX1	MUX2	MUX3	Charge	✈	Last
-	+	+	+	+	+	+	-	+	-

Parameter Description

<io>(num)(^SNFW)

Input and output selection

1	Digital input and output
2	Analog input and output

<mic>(num)(^SNFW)

Microphone selection

1	Microphone 1
2	Microphone 2

<ep>(num)(^SNFW)

Select differential earpiece amplifier

1	Selects the earpiece amplifier 1

2	Selects the earpiece amplifier 2
3	Selects both amplifiers. Note that both amplifiers are connected in parallel and therefore, get the same output power if <ep>=3.

<clock>(num)(^SNFW)

Parameter is mandatory if <io>=1 (digital).

0	256kHz clock
1	512kHz clock

<mode>(num)(^SNFW)

Parameter is mandatory if <io>=1 (digital).

0	Master mode
1	Slave mode

<frame_mode>(num)(^SNFW)

Parameter is mandatory if <io>=1 (digital).

0	Short frame
1	Long frame

Notes

- The factory defaults of AT^SAIC vary with the selected audio mode.
  If AT^SNFS=1 or 4 or 5, then AT^SAIC=2,1,1,0,0,0.
  If AT^SNFS=2 or 3 or 6, then AT^SAIC=2,2,2,0,0,0.
  AT^SNFD can be used to reset the factory defaults.
- For use after restart of the ME, you are advised to store the settings of AT^SAIC and AT^SNFS to the audio profile saved with AT^SNFW. Otherwise, audio mode 1 (AT^SNFS=1) and audio interface 2 (AT^SAIC=2,1,1,0,0,0) will be active each time the ME is powered up.
- The parameters <clock>, <mode> and <frame_mode> are mandatory, if parameter <io> is set to 1 (digital). These parameters can be used to configure the PCM functionality over the digital audio interface (DAI). The PCM interface supports master or slave mode, short frame or long frame synchronization and 256 kHz or 512 kHz bit clock frequency. In slave mode the clock frequency setting has no influence, because of the BCLKIN signal being directly used for data shifting. The setting may therefore be either 0 or 1. The table below lists possible configuration combinations.

Configuration	<clock>	<mode>	<framemode>
Master, 256kHz, short frame	0	0	0
Master, 256kHz, long frame	0	0	1
Master, 512kHz, short frame	1	0	0
Master, 512kHz, long frame	1	0	1
Slave, 256kHz, short frame	0 or 1	1	0
Slave, 256kHz, long frame	0 or 1	1	1
Slave, 512kHz, short frame	0 or 1	1	0
Slave, 512kHz, long frame	0 or 1	1	1

18.9 AT^SNFA Set or query of microphone attenuation

AT^SNFA specifies the large-scale attenuation on the microphone path of the audio device currently selected with AT^SNFS. The write command is only available in audio modes 2 to 6.

Syntax

Test Command

```
AT^SNFA=?
```

Response(s)

```
^SNFA: (list of supported <atten>s)
OK
```

Read Command

```
AT^SNFA?
```

Response(s)

```
^SNFA: <atten>
OK
ERROR
+CME ERROR: <err>
```

Write Command

```
AT^SNFA=<atten>
```

Response(s)

```
OK
ERROR
+CME ERROR: <err>
```

PIN	ASC0	ASC1	USB	MUX1	MUX2	MUX3	Charge	✈	Last
-	+	+	+	+	+	+	-	+	-

Parameter Description

<atten>(num)(^SNFW)

Multiplication factor for input samples. Parameter <atten> is identical with <inCalibrate> of AT^SNFI.
Formula used to calculate microphone attenuation (negative gain):
Gain in dB = 20 * log(<atten>/32768)

0...32767(P)...65535

0	Microphone is muted. Please note that AT^SNFA cannot be used to mute the microphone. Therefore, any attempt to enter 0 will be rejected with error response. Value 0 is returned only by the read command AT^SNFA? after the microphone was muted with AT^SNFM=0 during an active call.
32767	No attenuation on the microphone path Values greater than 32767 will be suppressed to 32767.

Notes

- This command is provided for compatibility with former products (e.g. M20) and is a subset of AT^SNFI. The parameter <inCalibrate> of AT^SNFI is identical with <atten> of AT^SNFA.
- To make the changes persistent use AT^SNFW.

Example

```
^SYSSTART
at^snfa=?
^SNFA: (0-65535)
OK
at^snfa?
^SNFA: 32767
OK
at^snfs=4
OK
at^snfa=1
OK
at^snfa?
^SNFA: 1
OK
at^snfi?
^SNFI: 5,1
OK
at^snfi=5,45
OK
at^snfa?
^SNFA: 45
OK
```

18.10 AT^SNFD Set audio parameters to manufacturer default values

AT^SNFD sets the active audio parameters to manufacturer defined default values. These default values can be changed and stored by the user and also by download with a new set of parameters.
The restored values are:
AT^SNFA: <atten>
AT^SNFI: <inBbcGain>, <inCalibrate>
AT^SNFO: <outBbcGain>, <outCalibrate>[0 to 4], <sideTone>
AT^SAIC: <io>, <mic>, <ep>
AT^SNFS: <audMode>

Syntax

Test Command

```
AT^SNFD=?
```

Response(s)

```
OK
```

Exec Command

```
AT^SNFD
```

Response(s)

```
OK
ERROR
+CME ERROR: <err>
```

PIN	ASC0	ASC1	USB	MUX1	MUX2	MUX3	Charge	✈	Last
-	+	+	+	+	+	+	-	+	-

Note

- Remember that the factory set audio mode 1 is fixed to <outStep>=4. Consequently, AT^SNFD restores <audMode> together with <outStep>=4, but does not affect the values of <outStep> currently selected in audio modes 2 - 6. This means, if <audMode>=1, the read commands AT^SNFO, AT^SNFV and AT+CLVL will always deliver <outStep>=4. In all other modes the <outStep> value is retained until explicitly changed.

18.11 AT^SNFG Generate Tone

The AT^SNFG write command generates a 'local tone' via the selected audio output device.
Beside the duration up to 3 combinations of frequency and amplitude can be used to compose a local tone.

Syntax

Test Command

AT^SNFG=?

Response(s)

^SNFG: (list of supported <duration>s), (list of supported <frequency>s), (list of supported <amplitude>s)[, ...]
OK

Write Command

AT^SNFG=<duration>, <frequency>, <amplitude>[, <frequency>, <amplitude>[, <frequency>, <amplitude>]]

Response(s)

OK
ERROR
+CME ERROR: <err>

PIN	ASC0	ASC1	USB	MUX1	MUX2	MUX3	Charge	✈	Last
-	+	+	+	+	+	+	-	+	-

Parameter Description

`<duration>`(num)

in Milliseconds.

0...65535

0	Mutes the currently played tone immediately.
65535	Activates a tone with infinit duration.

`<frequency>`(num)

in Hertz

200...3400

to be input in 1 Hz steps. Audible bandwidth is limited due to the voice band filters.

`<amplitude>`(num)

of the tone generator belonging to a frequency.

0...100

The output level at the speaker is dependent of the `<outBbcGain>` value (see `AT^SNFO`).
If more than one tone should be played, each amplitude level will be divided by the number of running tones to avoid overdriving of the internal amplifier. For example, if three tones with amplitude of 30 units should be generated each amplitude is reduced to 10. Setting of amplitude to 100 corresponds with using of current `<outBbcGain>` value (see `AT^SNFO`), 0 is mute.

Notes

- Response of the command is always "OK" as long as the input parameters are valid.
- If more than one pair of `<frequency>` and `<amplitude>` is used then the amplitude for each frequency is devided by the number of pairs.
- Tone priorities
  Ring tones (incoming call/short message), Supervisory tones,Call Progress tones, Battery tones, RTC tones and DTMF tones always have higher priority than a local tone. This means a local tone will be played only if no module tone with a higher priority is being played. A local tone will be stopped and ended when a tone or melody from the module starts to play.
- To suspend a local tone from playing use "AT^SNFG=0".
- Switching the tone generator on and off will trigger `AT+CIND` indicator "sounder" depending on current `AT+CMER` settings.
- If there is a voice call active then the local tone is mixed into the voice signal. In case of a multi party call the local tones are not available.

18.12 AT^SNFI Set microphone path parameters

AT^SNFI controls the microphone path amplification. Read and write options of this command refer to the active audio mode. The write command works only in audio modes 2 to 6.

Syntax

Test Command

```
AT^SNFI=?
```

Response(s)

```
^SNFI: (list of supported <inBbcGain>s) , (list of supported <inCalibrate>s)
OK
```

Read Command

```
AT^SNFI?
```

Response(s)

```
^SNFI: <inBbcGain>, <inCalibrate>
OK
ERROR
+CME ERROR: <err>
```

Write Command

```
AT^SNFI=<inBbcGain>, <inCalibrate>
```

Response(s)

```
OK
ERROR
+CME ERROR: <err>
```

PIN	ASC0	ASC1	USB	MUX1	MUX2	MUX3	Charge	✈	Last
-	+	+	+	+	+	+	-	+	-

Parameter Description

<inBbcGain>(num)(^SNFW)

ADC gain adjustable in eight 6 dB steps from 0 dB to 42 dB (0=0dB, 7=42dB, 8 steps of 6 dB).

0...7

<inCalibrate>(num)(^SNFW)

Multiplication factor for input samples. Formula to calculate the negative gain (attenuation) of the input signal: Gain in dB = 20 * log (inCalibrate / 32768)

0...32767

Notes

- The range of <inCalibrate> is up to 65535 but will be suppressed to 32767. Values above <inCalibrate>= 65535 will cause a failure.
- The parameter <inCalibrate> of AT^SNFI is identical with <atten> of AT^SNFA.
- For use after restart, changed values can be stored with AT^SNFW.
- Attention! When you adjust audio parameters avoid exceeding the maximum allowed level. Bear in mind that exposure to excessive levels of noise can cause physical damage to users!

18.13 AT^SNFM Set microphone audio path and power supply

The AT^SNFM read command returns the microphone mute and supply voltage status.
The AT^SNFM write command can be used to switch the microphone's audio path (muted / not muted) or to control the power supply of the VMIC line for the two microphone inputs of the TC65i Module.
The microphone can be muted or activated by changing <MicSwitch> in all audio modes (1 to 6) and during a voice call only. As an alternative, you can use the AT+CMUT command to mute the microphone.

Syntax

Test Command

```
AT^SNFM=?
```

Response(s)

```
^SNFM: (list of supported <MicSwitch>s) , (list of supported <MicVccCtl>s)
OK
```

Read Command

```
AT^SNFM?
```

Response(s)

```
^SNFM: <MicSwitch>, <MicVccState>
OK
ERROR
+CME ERROR: <err>
```

Write Command

```
AT^SNFM=[<MicSwitch>][, <MicVccCtl>]
```

Response(s)

```
OK
ERROR
+CME ERROR: <err>
```

PIN	ASC0	ASC1	USB	MUX1	MUX2	MUX3	Charge	✈	Last
-	+	+	+	+	+	+	-	+	-

Parameter Description

<MicSwitch>(num)

Microphone mute control parameter.
Evaluated only during voice calls and if <MicVccCtl> is omitted, e.g. AT^SNFM=1.
Command does not depend on audio mode.

0	Mutes the microphone.
1(P)	Activates the microphone.

<MicVccCtl>(num)

Microphone supply voltage control parameter. Controls the power supply VMIC of the two microphone inputs of the TC65i Module.
CME error is given if <MicSwitch> is not omitted. Enter for example AT^SNFM=,1 or AT^SNFM=,2.

0	Supply voltage is always switched off.
1	Supply voltage is always switched on.
2(P)	Supply voltage state during voice calls is controlled by the ME. Actual value is determined by parameter data set of the selected audio mode.

<MicVccState>(num)	
Microphone supply voltage control status.	
0	Supply voltage was set to a constant value.
2	Supply voltage state is controlled by the ME and depends on parameter data set of the selected audio mode.

Notes

- The programmable power supply of the VMIC line gives you greater flexibility in connecting audio accessories or using the two analog audio interfaces for a variety of functions other than audio. A detailed description of the extended usage of the analog audio interfaces can be found in [10].
- During an active call, users should be aware that when they switch back and forth between different audio modes (for example handsfree on/off) the value of <MicSwitch> does not change, i.e. the microphone mode is retained until explicitly changed.

18.14 AT^SNFO Set audio output (= loudspeaker path) parameter

AT^SNFO controls the earpiece path amplification. The read and write commands refer to the active audio mode. The write command works only in audio modes 2 to 6.

Syntax

Test Command

AT^SNFO=?

Response(s)

^SNFO: (list of supported <outBbcGain>s), (list of supported <outCalibrate>s), (list of supported <outStep>s), (list of supported <sideTone>s)
OK

Read Command

AT^SNFO?

Response(s)

^SNFO: <outBbcGain>, <outCalibrate>[0] , <outCalibrate>[1] , <outCalibrate>[2] , <outCalibrate>[3] , <outCalibrate>[4] , <outStep>, <sideTone>
OK
ERROR
+CME ERROR: <err>

Write Command

AT^SNFO=<outBbcGain>, <outCalibrate>[0] , <outCalibrate>[1] , <outCalibrate>[2] , <outCalibrate>[3] , <outCalibrate>[4] , <outStep>, <sideTone>

Response(s)

OK
ERROR
+CME ERROR: <err>

PIN	ASC0	ASC1	USB	MUX1	MUX2	MUX3	Charge	✈	Last
-	+	+	+	+	+	+	-	+	-

Parameter Description

<outBbcGain>(num)(^SNFW)

Negative DAC gain (attenuation) adjustable in four 6 dB steps from 0 dB to -18 dB (0=0 dB, 3=-18 dB)

0...3

<outCalibrate>(num)(^SNFW)

Formula to calculate the value of the 5 volume steps selectable with parameter <outStep>:
Attenuation = 20 * log (2 * outCalibrate[n] / 32768)

0...32767

<outStep>(num)

Volume steps 0 - 4, each defined with outCalibrate[n]

0...[4]

<sideTone>(num)(^SNFW)

Multiplication factor for the sidetone gain.
Formula to calculate how much of the original microphone signal is added to the earpiece signal:
Sidetone gain in dB = 20 * log (sideTone / 32768).

0...32767

Notes

- <outCalibrate> specifies the amount of volume of each <outStep>. The range of each <outCalibrate> is up to 65535, but will be suppressed to 32767. A value above <outCalibrate>= 65535 will cause an error.
- The range of <sideTone> is up to 65535, but will be suppressed to 32767. A value above <sideTone>= 65535 will cause an error.
- Any change to <outStep> takes effect in audio modes 2 to 6. That is, when you change <outStep> and then select another mode with AT^SNFS, the same step will be applied. Nevertheless, the sound quality and the amount of volume are not necessarily the same, since all remaining audio parameters can use different values in either mode.
- Audio mode 1 is fixed to <outStep>=4. In this mode, any attempt to change <outStep> or other parameters returns an error.
- The value of <outStep> is stored non-volatile when the ME is powered down with AT^SMSO or reset with AT+CFUN=x,1. Any other parameters changed with AT^SNFO need to be saved with AT^SNFW for use after restart. See also AT^SNFD for details on restoring factory defaults.
- The values of <outStep> can also be changed with AT^SNFV and AT+CLVL.
- CAUTION! When you adjust audio parameters avoid exceeding the maximum allowed level. Bear in mind that exposure to excessive levels of noise can cause physical damage to users!

18.15 AT^SNFPT Set progress tones

AT^SNFPT controls the Call Progress Tones generated at the beginning of a mobile originated call setup. Please note that the setting is stored volatile, i.e. after restart or reset, the default value 1 will be restored.

Syntax

Test Command

```
AT^SNFPT=?
```

Response(s)

```
^SNFPT: (list of supported <pt>s)
OK
```

Read Command

```
AT^SNFPT?
```

Response(s)

```
^SNFPT: <pt>
OK
ERROR
+CME ERROR: <err>
```

Write Command

```
AT^SNFPT=<pt>
```

Response(s)

```
OK
ERROR
+CME ERROR: <err>
```

PIN	ASC0	ASC1	USB	MUX1	MUX2	MUX3	Charge	✈	Last
-	+	+	+	+	+	+	-	+	-

Parameter Description

<pt>(num)	
0	Disables Call Progress Tones
1(P)	Enables Call Progress Tones (audible tones shortly heard on the phone when ME starts to set up a call.)

18.16 AT^SNFS Select audio hardware set

The AT^SNFS write command serves to set the audio mode required for the connected equipment. AT^SNFS can also be used in conjunction with AT^SAIC. This is useful, for example, if the audio interfaces are operated alternatively to benefit from different devices. Each audio mode can be assigned a specific interface. To do so, first select the audio mode with AT^SNFS, then activate the audio interface with AT^SAIC and finally enter AT^SNFW to store the settings to your audio profile. To switch back and forth it is sufficient to use AT^SNFS.

Syntax

Test Command

```
AT^SNFS=?
```

Response(s)

```
^SNFS: (list of supported <audMode>s)
OK
```

Read Command

```
AT^SNFS?
```

Response(s)

```
^SNFS: <audMode>
OK
ERROR
+CME ERROR: <err>
```

Write Command

```
AT^SNFS=<audMode>
```

Response(s)

```
OK
ERROR
+CME ERROR: <err>
```

PIN	ASC0	ASC1	USB	MUX1	MUX2	MUX3	Charge	✈	Last
-	+	+	+	+	+	+	-	+	-

Parameter Description

<audMode>(num)(^SNFW)	
[1]	Audio mode 1: Standard mode optimized for the reference handset, that can be connected to the analog interface 1 (see "TC65i Hardware Interface Description" for information on this handset.) To adjust the volume use the knob of the reference handset. In audio mode 4, this handset can be used with user defined parameters. Note: The default parameters are determined for type approval and are not adjustable with AT commands. AT^SNFD restores <audMode> 1.
2	Audio mode 2: Customer specific mode for a basic handsfree (speakerphone) device (Siemens Car Kit Portable). Analog interface 2 is assumed as default.
3	Audio mode 3: Customer specific mode for a mono-headset. Analog interface 2 is assumed as default.
4	Audio mode 4: Customer specific mode for a user handset. Analog interface 1 is assumed as default.

5	Audio mode 5: Customer specific mode. Analog interface 1 is assumed as default.
6	Audio mode 6: Customer specific mode. Analog interface 2 is assumed as default.

Notes

- The write command can be used during a voice call to switch back and forth between different modes. This allows the user, for example, to switch handsfree operation (speakerphone) on and off.
- Users should be aware that <outStep> is a global setting. This means, when another audio mode is selected during a call, the value of <outStep> does not change. This is also true for mute operation which can be set with AT^SNFM or AT+CMUT: If the microphone is muted and the user selects another audio mode during the call, then the microphone remains muted until explicitly changed. Exception: In audio mode 1 <outStep>=4 is fix.
- For use after restart of the module, you are advised to store the selected mode to the audio profile saved with AT^SNFW. Otherwise, audio mode 1 will be active each time the module is powered up.
- Users should be aware that when using this AT command quickly after "^SYSSTART" a "+CME ERROR: operation temporary not allowed" is received. The audio data may not yet be accessible, resulting in a short delay (less than 400ms) before the requested AT command response is returned.

Examples

EXAMPLE 1

Suppose a user wishes to use alternatively a handsfree device (speakerphone) and a handset. The handset can be connected to the first analog interface and adjusted to audio mode 4. The handsfree device can be attached to the second analog interface and adjusted to audio mode 2. The factory defaults of AT^SAIC need not be changed.
Settings for the handset:

```
AT^SNFS=4
OK
AT^SAIC?                    Factory default of AT^SAIC assigned to audio mode 4.
^SAIC: 2,1,1
OK
```

Settings for the handsfree device:

```
AT^SNFS=2
OK
AT^SAIC?                    Factory default of AT^SAIC assigned to audio mode 2.
^SAIC: 2,2,2
OK
```

To store the configuration to the user defined audio profile:

```
AT^SNFW                     Stores the audio mode and the interface.
OK
```

To switch back and forth:

```
AT^SNFS=4                   Switches to the handset connected to analog interface 1.
OK
AT^SNFS=2                   Switches to the handsfree device at analog interface 2.
OK
```

EXAMPLE 2

The following example illustrates a combination of a handset and a handsfree device connected to other interfaces than those assumed as factory default.
Settings for a handset connected to the second analog interface and adjusted to audio mode 4:

```
AT^SNFS=4
OK
```

```
AT^SAIC=2,2,2
OK
```

Settings for a handsfree device connected to the first analog interface and adjusted to audio mode 2:

```
AT^SNFS=2
OK
AT^SAIC=2,1,1
OK
```

To store the configuration to the user defined audio profile:

```
AT^SNFW                 Stores the audio mode and the interface.
OK
```

To switch back and forth:

```
AT^SNFS=4               Switches to the handset connected to analog interface 1.
OK
AT^SNFS=2               Switches to the handsfree device at analog interface 2.
OK
```

18.17 AT^SNFTTY Signal TTY/CTM audio mode capability

TC65i offers basic support for equipment using the CTM standard (Cellular Text Telephone Modems). The benefit of CTM is that text characters typed on a TTY device (Text Telephone Type-writer) can be transformed into special audio burst signals for reliable transmission via the existing speech channels of a cellular phone system. If CTM mode is activated, the ME will set the necessary bearer capability bit on outgoing (mobile originated) calls and incoming calls with this bearer capability bit set are accepted. The TE needs to decode the special audio burst signals.
If CTM mode is disabled, the ME will clear the bearer capability bit on mobile originated calls and incoming calls with the bearer capability bit set are rejected because the TC65i expects that CTM coded speech data cannot be decoded by the TE.
Designed to set the module's speech system into CTM mode, the AT^SNFTTY command allows a CTM device to be connected to one of the three audio interfaces of TC65i. Traditional TTY devices that do not incorporate CTM functionality can be connected through an external TTY-to-CTM adapter.
Related documents: Refer to the relevant standards, such as 3GPP TS 26.226 (ETSI TS 126 226) and 3GPP TS 23.228 (ETSI TS 123 226). 3GPP documentation can be retrieved, for example, from http://www.3gpp.org/specs/specs.htm. Application Note 22 "Using TTY/CTM equipment" supplies information needed to connect TTY/CTM equipment to the TC65i.

Requirements for using TTY/CTM features:

- The TTY/CTM functionality requires audio mode 5 or 6 which is set by AT^SNFS. When the appropriate audio settings are enabled you may select either AT^SNFTTY=1 or 2.
- Depending on which audio interface the CTM device is connected to, select the appropriate settings via AT^SAIC.

Syntax

Test Command

```
AT^SNFTTY=?
```

Response(s)

```
^SNFTTY: (list of supported <audioState>s)
OK
```

Read Command

```
AT^SNFTTY?
```

Response(s)

```
^SNFTTY: <audioState>
OK
ERROR
+CME ERROR: <err>
```

Write Command

```
AT^SNFTTY=<audioState>
```

Response(s)

```
OK
ERROR
+CME ERROR: <err>
```

PIN	ASC0	ASC1	USB	MUX1	MUX2	MUX3	Charge	✈	Last
-	+	+	+	+	+	+	-	-	-

Parameter Description

<audioState>(num)

0(P)	Audio path is in normal speech mode.

1	Audio path is in TTY/CTM mode (external CTM modem).
2	Audio path is in TTY/CTM mode (internal CTM modem).

18.18 AT^SNFV Set loudspeaker volume

AT^SNFV can be used to set the volume of the loudspeaker to the value <outCalibrate> addressed by <outStep>. The read and write commands refer to the active audio mode. The write command works only in audio modes 2 to 6.

Syntax

Test Command

AT^SNFV=?

Response(s)

^SNFV: (list of supported <outStep>s)
OK

Read Command

AT^SNFV?

Response(s)

^SNFV: <outStep>
OK
ERROR
+CME ERROR: <err>

Write Command

AT^SNFV=<outStep>

Response(s)

OK
ERROR
+CME ERROR: <err>

PIN	ASC0	ASC1	USB	MUX1	MUX2	MUX3	Charge	✈	Last
-	+	+	+	+	+	+	-	+	-

Parameter Description

<outStep>(num)

The actual volume of each step is defined by the parameter <outCalibrate>, which can be set with AT^SNFO.

0...4(P)

Notes

- Any change to <outStep> takes effect in audio modes 2 to 6. That is, when you change <outStep> and then select another mode with AT^SNFS, the same step will be applied. Nevertheless, the actual volume can be quite different, depending on the values of <outCalibrate> set in each mode. The only exception is audio mode 1 which is fixed to <outStep>=4.
- <outStep> is stored non-volatile when the ME is powered down with AT^SMSO or reset with AT+CFUN=1,1. <outStep> is not stored by AT^SNFW.
- <outStep> can also be changed by AT^SNFO (Section 18.14) and AT+CLVL (Section 18.4).
- Users should be aware that when using this AT command quickly after "^SYSSTART" a "+CME ERROR: operation temporary not allowed" is received. The audio data may not yet be accessible, resulting in a short delay (less than 400ms) before the requested AT command response is returned.

18.19 AT^SNFW Write audio setting in non-volatile store

AT^SNFW causes the TA to write the currently selected audio parameters to non-volatile store. The saved audio profile includes the following parameters:
AT^SNFA: <atten>
AT^SNFI: <inBbcGain>, <inCalibrate>
AT^SNFO: <outBbcGain>, <outCalibrate>[0 to 4], <sideTone>
AT^SNFS: <audMode>
AT^SAIC: <io>, <mic>, <ep>.

Syntax

Test Command

```
AT^SNFW=?
```

Response(s)

```
OK
```

Exec Command

```
AT^SNFW
```

Response(s)

```
OK
ERROR
+CME ERROR: <err>
```

PIN	ASC0	ASC1	USB	MUX1	MUX2	MUX3	Charge	✈	Last
-	+	+	+	+	+	+	-	+	-

18.20 AT^SRTC Ring tone configuration

The AT^SRTC read command returns the current <type> and current <volume>. The read command can be used while test playback is off or on. In the latter case, see execute command for details.

The AT^SRTC execute command is intended only for testing. It starts to play a melody from the audio output currently selected with AT^SNFS. To deactivate test playback use AT^SRTC again.
During test playback, you can enter the write command to select another melody and adjust the volume. Also, you can enter the read command to check the type and volume of the current ring tone, and to view the status of playback (on / off).

The AT^SRTC write command chooses the type and volume of ring tones. The selected <type> and <volume> are stored non-volatile. The only exception is <type>=0 which is not stored because it is intended only to quickly mute the tone currently played. So <type>=0 only stops immediately the audible ring tone, but does not terminate the RING URC.

Syntax

Test Command

```
AT^SRTC=?
```

Response(s)

```
^SRTC:(list of supported) <type>s, (list of supported) <volume>s
OK
```

Read Command

```
AT^SRTC?
```

Response(s)

```
^SRTC: <type>, <volume>, <status>
OK
ERROR
+CME ERROR: <err>
```

Exec Command

```
AT^SRTC
```

Response(s)

```
OK
ERROR
+CME ERROR: <err>
```

Write Command

```
AT^SRTC=[<type>][, <volume>]
```

Response(s)

```
^SRTC: <type>, <volume>
OK
ERROR
+CME ERROR: <err>
```

PIN	ASC0	ASC1	USB	MUX1	MUX2	MUX3	Charge	✈	Last
-	+	+	+	+	+	+	-	+	-

Parameter Description

<type>(num)

Type of ring tone. You have a choice of 7 different ring tones and melodies. All will be played from the audio output selected with the AT^SNFS command. <type>=0 is only intended for muting.

0	Mutes the currently played tone immediately.
1	Sequence 1
2	Sequence 2
3(D)	Sequence 3
4	Sequence 4
5	Sequence 5
6	Sequence 6
7	Sequence 7

<volume>(num)

Volume of ring tone, varies from low to high

0(D)	Mute
1	Very low
2	Identical with 1
3	Low
4	Identical with 3
5	Middle
6	Identical with 5
7	High

<status>(num)

Status of test ringing. Indicates whether or not a melody is currently being played back for testing

0	Switched off
1	Switched on

Notes

- Before first using ring tones note that the following settings apply:
  We have chosen to let you decide your own preferences when you start using ring tones. Therefore, factory setting is AT^SRTC=3,0,0 (ring tones are muted). To activate ring tones for the very first time, first enter the write command and simply change the volume. After applying a firmware update the volume and type selected before the firmware update will be preserved.
- If the <type> is changed while a call is ringing (RING URC) or active, the ME returns OK, but the new melody does not take effect until after the call has ended.
- Users should be aware that when using this AT command quickly after "^SYSSTART" a "+CME ERROR: operation temporary not allowed" is received. The audio data may not yet be accessible, resulting in a short delay (less than 400ms) before the requested AT command response is returned.

19. Hardware related Commands

All AT commands described in this chapter are related to the hardware interface of the TC65i. Further information regarding this interface is available in the "TC65i Hardware Interface Description" [2].

19.1 AT+CCLK Real Time Clock

Syntax

Test Command

```
AT+CCLK=?
```

Response(s)

```
OK
```

Read Command

```
AT+CCLK?
```

Response(s)

```
+CCLK: <time>
OK
```

Write Command

```
AT+CCLK=<time>
```

Response(s)

```
OK
ERROR
+CME ERROR: <err>
```

PIN	ASC0	ASC1	USB	MUX1	MUX2	MUX3	Charge	✈	Last
-	+	+	+	+	+	+	+	+	-

Reference(s)

GSM 07.07

Parameter Description

<time>(str)

Format is "yy/mm/dd,hh:mm:ss", where the characters indicate the two last digits of the year, followed by month, day, hour, minutes, seconds; for example 6th of July 2005, 22:10:00 hours equals to "05/07/06,22:10:00" Factory default is "02/01/01,00:00:00"

Notes

- <time> is retained if the device enters the Power Down mode via AT^SMSO.
- <time> will be reset to its factory default if power is totally disconnected. In this case, the clock starts with <time>= "02/01/01,00:00:00" upon next power-up.
- Each time TC65i is restarted it takes 2s to re-initialize the RTC and to update the current time. Therefore, it is recommended to wait 2s before using the commands AT+CCLK and AT+CALA (for example 2s after ^SYSSTART has been output).

19.2 AT+CALA Set alarm time

The AT+CALA write command can be used to set an alarm time in the ME or to clear a programmed alarm. When the alarm time is reached and the alarm is executed the ME returns an Unsolicited Result Code (URC) and the alarm time is reset to "00/01/01,00:00:00".
The alarm can adopt two functions, depending on whether or not you switch the GSM engine off after setting the alarm:

- Reminder message: You can use the alarm function to generate reminder messages. For this purpose, set the alarm as described below and do not switch off or power down the ME. When executed the message comes as an Unsolicited Result Code which reads "+CALA".
- Airplane mode: The alarm function can be used to wake up the ME at a scheduled time. For this purpose, set the alarm as described below. Then power down the ME by entering the AT^SMSO command. When the alarm time is reached the ME enters the Airplane mode, notified to the user by the URC "^SYSSTART AIRPLANE MODE" and, if available, by a user defined text message (specified with <text>). In Airplane mode, the RF interface of the ME is shut down to prevent it from unintentionally logging into the GSM network. All AT commands whose execution requires a radio connection are disabled. A list of AT commands supported during Airplane mode can be found in Section 23.4, Availability of AT Commands Depending on Operating Mode of ME. To return from Airplane mode to Normal mode use the AT^SCFG command and set the parameter <map> to "off". This immediately activates the RF interface and restores access to all AT commands. The URC "^SYSSTART" notifies the user that the ME has returned to Normal mode. Please note that setting an alarm with AT+CALA is one method to wake up into Airplane mode. The second approach is using the AT^SCFG command, parameter <mapos>. For further detail on Airplane mode refer to Section 2.14, AT^SCFG.

The AT+CALA test command returns the supported array index values <n>, the supported alarm types <type> and the maximum length of the text <tlength> to be output.
The AT+CALA read command returns the current alarm settings in the ME.

Syntax

Test Command

```
AT+CALA=?
```

Response(s)

```
+CALA: (list of supported<n>s), (list of supported<type>s), (list of supported<tlength>s)
OK
ERROR
+CME ERROR: <err>
```

Read Command

```
AT+CALA?
```

Response(s)

```
+CALA: <time>[, <n>[, <type>[, <text>]]]
OK
ERROR
+CME ERROR: <err>
```

Write Command

```
AT+CALA=<time>[, <n>[, <type>[, <text>]]]
```

Response(s)

```
OK
ERROR
+CME ERROR: <err>
```

PIN	ASC0	ASC1	USB	MUX1	MUX2	MUX3	Charge	✈	Last
-	+	+	+	+	+	+	+	+	-

Reference(s)

GSM 07.07

Unsolicited Result Code

+CALA: [<text>]

Indicates reminder message.

After power-down and wake-up at the scheduled time, the following URC indicates that the ME has entered the Airplane mode:
"^SYSSTART AIRPLANE MODE"
+CALA: [<text>]

Parameter Description

<time>(str)

Format is "yy/MM/dd,hh:mm:ss". For example, 6th of July 2005, 22:10:00 equals to "05/07/06,22:10:00" (see also AT+CCLK).
To clear a given alarm before its scheduled time simply enter an empty string for parameter <time>. See examples below.
Note: <time> can be set to a date of maximum 365 days minus 1 second ahead of the currently set time, otherwise the write command returns an error and resets the alarm time. If <time> equals the current date and time or is set to an earlier date, the write command returns an error.

<n>(num)

Integer type value indicating the array index of the alarm.
The ME allows to set only one alarm at a time. Therefore, the list of supported alarm events indicated by the test command AT+CALA=? is <n>=0. If a second alarm time is set, the previous alarm will be deleted. Therefore, the read command AT+CALA? will always return <n>=0. This is also true if individual settings are made on ASC0 and ASC1 or the various Multiplexer channels, for details see notes below.

<type>(num)

Integer type value indicating the type of the alarm.

0	Alarm indication: text message via serial interface

<text>(str)

String type value indicating the text to be displayed when alarm time is reached; maximum length is <tlength>. By factory default, <text> is undefined.
Note: <text> will be stored to the non-volatile flash memory when the device enters the Power Down mode via AT^SMSO. Once saved, it will be available upon next power-up, until you overwrite it by typing another text. This eliminates the need to enter the full string when setting a fresh alarm.
<text> should not contain characters which are coded differently in ASCII and GSM (e.g. umlauts), see also "Supported character sets" and "GSM alphabet tables".

<tlength>(num)

Integer type value indicating the maximum length of <text>. The maximum length is 16.

Notes

- After the alarm was executed the parameter <time> of AT+CALA will be reset to "00/01/01,00:00:00", but <text> will be preserved as described above.
- If TC65i is totally disconnected from power supply the most recently saved configuration of +CALA: <time>[,<n>[,<type>[,<text>]]] will be presented when TC65i is powered up.
- Each time TC65i is restarted with ignition it takes 2s to re-initialize the RTC and to update the current time. Therefore, it is recommended to wait 2s before using the commands AT+CCLK and AT+CALA (for example 2s after ^SYSSTART has been output).

- Alarm settings on ASC0 / ASC1 and different Multiplexer channels (see AT+CMUX):
  - On each interface an individual <text> message can be stored, but only one time setting applies. This means an alarm <time> set on one of the interfaces overwrites the time setting on all remaining interfaces. Therefore, the total number of alarm events returned by the read command AT+CALA? will always be <n>=0, no matter whether different text messages are stored.
  - When the scheduled alarm occurs, the ME sends the URC only on the interface where the most recent alarm setting was made. The alarm time will be reset to "00/01/01,00:00:00" on all interfaces.

Examples

EXAMPLE 1

You may want to configure a reminder message for July 31, 2005, at 9.30h, including the message "Good Morning".

```
AT+CALA="05/07/31,09:30:00",0,0,"Good Morning"
OK
```

Do not switch off the GSM engine.When the alarm occurs the ME returns the following URC:

```
+CALA: Good Morning
```

EXAMPLE 2

To set a fresh alarm using the same message as in Example 1, simply enter date and time. <n>, <type>, <text>, <tlength> can be omitted:

```
AT+CALA="05/07/31,08:50:00"
OK
```

When the alarm is executed the URC comes with the same message:

```
+CALA: Good Morning
```

EXAMPLE 3

To enable the ME to wake up into Airplane mode, e.g. on July 20, 2005, at 8.30h, enter

```
AT+CALA="05/07/20,08:30:00"
OK
```

Next, power down the ME:

```
AT^SMSO
^SMSO: MS OFF
OK
^SHUTDOWN
```

When the alarm is executed the ME wakes up to Airplane mode and displays a URC. If available, this line is followed by the individual <text> most recently saved. If no individual message was saved only the first line appears.

```
"^SYSSTART AIRPLANE MODE"
+CALA: Good Morning
```

EXAMPLE 4

To delete an alarm before its scheduled time is reached enter an empty string for parameter <time>. This will restore the default time and clear any individual message defined with <text>.

```
AT+CALA=""
OK
AT+CALA?
+CALA: "00/01/01,00:00:00",0,0,""
OK
```

19.3 AT^SBC Battery Charge Control

The functions of the AT^SBC differ depending on whether or not a battery is present.

- General functions:
  The AT^SBC provides URCs used to alert the user of undervoltage and overvoltage conditions before the module switches off. The automatic shutdown caused by undervoltage or overvoltage is equivalent to the power-down initiated with the AT^SMSO command, i.e. ME logs off from the network and the software enters a secure state avoiding loss of data. When the module is in IDLE mode it takes typically one minute to deregister from the network and to switch off. For further details regarding automatic shutdown and voltage ratings please refer to the Hardware Interface Description [2].
  The URCs do not need to activated by the TE. They will be output automatically when fault conditions occur.
- Functions available with battery connected:
  The AT^SBC read command can be used to query the status of the battery and the charger.
  The AT^SBC write command is important for entering the current consumption of the external application via <current>. It should be noted that the charge control supported by TC65i works only if the requirements described in the Hardware Interface Description [2] are met (battery type Lithium-Ion or Lithium Polymer, presence of an NTC and protection circuit etc.) and if <current> is correctly specified. If the battery does not incorporate an NTC, or the battery and the NTC are not compliant with the specified requirements the battery cannot be detected by TC65i.

Syntax

Test Command

```
AT^SBC=?
```

Response(s)

```
^SBC:(list of supported <bcs>s), (list of supported <bcl>s), (list of supported <mpc>s)
OK
```

Read Command

```
AT^SBC?
```

Response(s)

```
^SBC: <bcs>,<bcl>,<mpc>
OK
ERROR
+CME ERROR: <err>
```

Write Command

```
AT^SBC=<current>
```

Response(s)

```
OK
ERROR
+CME ERROR: <err>
```

PIN	ASC0	ASC1	USB	MUX1	MUX2	MUX3	Charge	✈	Last
-	+	+	+	+	+	+	±	+	-

Unsolicited Result Codes

URC 1

```
^SBC: Undervoltage
```

The message will be reported, for example, when the user attempts to set up a call while the voltage is close to the critical limit and further power loss is caused during the transmit burst. When the external charging circuit includes an NTC connected to the BATT_TEMP pin, the URC appears several times before the module switches off.
In applications which are not battery operated, i.e. where no NTC is connected to the BATT_TEMP pin, TC65i will present the undervoltage URC only once and will then switch off without sending any further messages.

URC 2

^SBC: Overvoltage warning

This URC is an alarm indicator displayed when the supply voltage approaches its maximum level. The URC appears only once.

URC 3

^SBC: Overvoltage shutdown

This URC will be reported when the voltage exceeds the maximum level specified in the Hardware Interface Description [2]. It appears only once before the module starts to perform an orderly shutdown.
In applications powered from Lithium batteries the incorporated protection circuit typically prevents overcharging, thus eliminating the risk of overvoltage conditions. Yet, in case of charging errors, for example caused by a bad battery or due to the absence of a battery protection circuit, the module's overvoltage shutdown function will take effect to avoid overcharging.

Parameter Description

<bcs>(num)

Connection status of battery pack

0	No charging adapter is connected
1	Charging adapter is connected
2	Charging adapter is connected, charging in progress
3	Charging adapter is connected, charging has finished
4	Charging error, charging is interrupted
5	False charging temperature, charging is interrupted while temperature is beyond allowed range

<bcl>(num)

Battery capacity
0, 20, 40, 60, 80, 100 percent of remaining capacity (6 steps).
"0" indicates that either the battery is exhausted or the capacity value is not available. "100" indicates a remaining capacity between 81 and 100 percent, "80" indicates 61 ... 81 percent, and so on.
While charging is in progress (charging adapter connected) the battery capacity is not available. Consequently, parameter <bcl>=0. To query the battery capacity disconnect the charger.

<mpc>(num)

Current consumption of the host application as specified with parameter <current>.

<current>(num)

0(P)...5000	Enter the current consumption of your host application in mA. This information enables TC65i to correctly determine the end of charging and terminate charging automatically when the battery is fully charged. Note that if <current> is inaccurate, and the application draws a current higher than the final charge current, either charging will not be terminated or the battery fails to reach its maximum voltage. Therefore, the termination condition is defined as: current consumption dependent on operating mode of the ME plus current consumption of the external application. If used, the current flowing over the VEXT pin of the application interface must be added, too. The specified value will also be displayed as parameter <mpc> of the AT^SBC read command. When the TC65i is powered down or reset, the value of <current> is restored to its default. This affects the charging control. Therefore, the parameter should be set every time when needed after rebooting the TC65i.

Notes

- If multiplex mode (AT+CMUX) is active, any virtual channel can be used for entering the read or write command. The undervoltage URC will be issued simultaneously on all three channels.
- Another URC type required for battery powered applications is the URC "^SYSSTART CHARGE ONLY MODE". It is indicated automatically when the module enters this mode (except when autobauding is active). See AT+CFUN for details.

19.3.1 Responses returned by read command

Responses returned by the AT^SBC read command vary with the operating mode of the TC65i:

- Normal mode: TC65i is switched on by Ignition pin and running in SLEEP, IDLE, TALK or DATA mode. Charger is not connected. The AT^SBC read command indicates the battery capacity and the current consumption of the application (if value of application was specified before as <current>).
- Normal mode + charging: Allows charging while TC65i is switched on by Ignition pin and running in SLEEP, IDLE, TALK or DATA mode. The AT^SBC read command returns only charger status and current consumption of the application. Percentage of battery capacity is not available.
- CHARGE ONLY mode: Allows charging while TC65i is detached from GSM network. When started, the mode is indicated by the URC "^SYSSTART CHARGE ONLY MODE". The AT^SBC read command returns only the charger status and current consumption of the application. Percentage of battery capacity is not available. In CHARGE ONLY mode a limited number of AT commands is accessible (see Appendix). There are several ways to activate the CHARGE ONLY mode:
  - from POWER DOWN mode: Connect charger while the TC65i was powered down with AT^SMSO
  - from Normal mode: Connect charger, then enter AT^SMSO.

19.4 AT^SBV Battery/Supply Voltage

The AT^SBV execute command allows to monitor the supply (or battery) voltage of the module. The voltage is continuously measured at intervals depending on the operating mode of the RF interface. The duration of a measurement period ranges from 0.5s in TALK / DATA mode up to 50s when TC65i is in IDLE mode or Limited Service (deregistered). The displayed value is averaged over the last measuring period before the AT^SBV command was executed.

The measurement is related to the reference points of BATT+ and GND. For details on the reference points please refer to the Hardware Interface Description [2].

Syntax

Test Command

```
AT^SBV=?
```

Response(s)

```
OK
ERROR
+CME ERROR: <err>
```

Exec Command

```
AT^SBV
```

Response(s)

```
^SBV: <value>
OK
ERROR
+CME ERROR: <err>
```

PIN	ASC0	ASC1	USB	MUX1	MUX2	MUX3	Charge	✈	Last
-	+	+	+	+	+	+	-	+	-

Parameter Description

`<value>`(num)

Supply (or battery) voltage in mV

19.5 AT^SCTM Set critical operating temperature presentation mode or query temperature

Use this command to monitor the temperature range of the module and the battery. The write command enables or disables the presentation of URCs to report critical temperature limits.
CAUTION: During a guard period of two minutes after power-up, the module will not switch off, even if the critical temperature limit is exceeded. This allows the user to issue emergency calls before the module switches off. During this guard period, the module operates in an automatic report mode: URCs can be always displayed regardless of the selected mode <n>. Refer to Section 19.5.1, Deferred shutdown for detail.

Syntax

Test Command

AT^SCTM=?

Response(s)

^SCTM:(list of supported <n>s)[, (range of <temp>in Celsius)]
OK

Read Command

AT^SCTM?

Response(s)

^SCTM: <n>, <m>[, <temp>]
OK
ERROR
+CME ERROR: <err>

Write Command

AT^SCTM=<n>[, <p>]

Response(s)

OK
ERROR
+CME ERROR: <err>

PIN	ASC0	ASC1	USB	MUX1	MUX2	MUX3	Charge	✈	Last
-	+	+	+	+	+	+	+	+	-

Unsolicited Result Codes

URC 1

URCs will be automatically sent to the TA when the temperature reaches or exceeds the critical level, or when it is back to normal.

^SCTM_A: <m>

for battery temperature

URC 2

^SCTM_B: <m>

for module (board) temperature

Command Description

The read command returns:

- the URC presentation mode
- information about the current temperature range of the module
- The board temperature in Celsius if parameter <p>=1.

Please note that the Read command does not indicate the temperature range of the battery. The battery temperature can only be reported by an Unsolicited Result Code.

Select <n> to enable or disable the presentation of the URCs. Please note that the setting will not be stored upon Power Down, i.e. after restart or reset, the default <n>=0 will be restored. To benefit from the URCs <n>=1 needs to be selected every time you reboot the GSM engine.

Parameter Description

<n>(num)	
0(&F)(P)	Presentation of URCs is disabled (except for <m> equal to -2 or +2).
1	Presentation of URCs is enabled.

<m>(num)	
-2	Below lowest temperature limit (causes immediate switch-off)
-1	Below low temperature alert limit
0	Normal operating temperature
1	Above upper temperature alert limit
2	Above uppermost temperature limit (causes immediate switch-off)

<p>(num)	
0(&F)(P)	Suppress output of <temp> in read command.
1	Output <temp> in test and read command.

<temp>(num)

Board temperature in Celsius. Is comprised between the lowest temperature warning level and the uppermost temperature warning level.

Notes

- Please refer to the "Hardware Interface Description" for specifications on critical temperature ranges.
- To avoid damage the module will shut down once the critical temperature is exceeded.
  The procedure is equivalent to the power-down initiated with AT^SMSO.
- URCs indicating the alert level "1" or "-1" are intended to enable the user to take appropriate precautions, such as protect the module and the battery from exposure to extreme conditions, or save or back up data etc.
  The presentation of "1" or "-1" URCs depends on the settings selected with the write command:
  If <n>=0: Presentation is enabled during the two minute guard period after the module was switched on. After expiry of the two minute guard period, the presentation will be disabled, i.e. no URCs with alert levels "1" or "-1" will be generated.
  If <n>= 1: Presentation of "1" or "-1" URCs is always enabled.
- Level "2" or "-2" URCs are followed by immediate shutdown, except in cases described in Section 19.5.1, Deferred shutdown. The presentation of these URCs is always enabled, i.e. they will be output even though the factory setting AT^SCTM=0 was never changed.

Examples

EXAMPLE 1

URCs issued when the operating temperature is out of range:

^SCTM_A: 1	Caution: Battery close to overtemperature limit.
^SCTM_A: 2	Alert: Battery above overtemperature limit. Engine switches off.
^SCTM_B: 1	Caution: Module close to overtemperature limit.
^SCTM_B: 2	Alert: Module is above overtemperature limit and switches off.
^SCTM_A: -1	Caution: Battery close to undertemperature limit.
^SCTM_A: -2	Alert: Battery below undertemperature limit. Engine switches off.
^SCTM_B: -1	Caution: Module close to undertemperature limit.
^SCTM_B: -2	Alert: Module is below undertemperature limit and switches off.

EXAMPLE 2

URCs issued when the temperature is back to normal (URC is output once):

^SCTM_A: 0	Battery temperature back to normal temperature.
^SCTM_B: 0	Module back to normal temperature.

19.5.1 Deferred shutdown

In the following cases, automatic shutdown will be deferred if a critical temperature limit is exceeded:

- while an emergency call is in progress
- during a two minute guard period after powerup. This guard period has been introduced in order to allow for the user to make an emergency call. The start of any one of these calls extends the guard period until the end of the call. Any other network activity may be terminated by shutdown upon expiry of the guard time.

While in a "deferred shutdown" situation, the engine continues to measure the temperature and to deliver alert messages, but deactivates the shutdown functionality. Once the guard period is expired or the call is terminated, full temperature control will be resumed. If the temperature is still out of range, ME switches off immediately (without another alert message).
CAUTION! Automatic shutdown is a safety feature intended to prevent damage to the module. Extended usage of the deferred shutdown facilities provided may result in damage to the module, and possibly other severe consequences.

19.6 AT^SSYNC Configure SYNC Pin

The AT^SSYNC command serves to configure the SYNC pin of the application interface. Please note that the SYNC pin may be assigned different functions: Depending on the design of the host application, the pin can either be used to indicate the current consumption in a transmit burst or to drive a status LED connected to the pin as specified in [2]. For detailed information on the SYNC pin and its LED functionality refer to [2]. Before changing the mode of the SYNC pin, carefully read the technical specifications.

Syntax

Test Command

```
AT^SSYNC=?
```

Response(s)

```
^SSYNC: list of supported <mode>s
OK
```

Read Command

```
AT^SSYNC?
```

Response(s)

```
^SSYNC: <mode>
OK
```

Write Command

```
AT^SSYNC=<mode>
```

Response(s)

```
OK
```

PIN	ASC0	ASC1	USB	MUX1	MUX2	MUX3	Charge	✈	Last
-	+	+	+	+	+	+	-	-	-

Parameter Description

<mode>(num)

Operation mode of the SYNC pin. Setting is stored non-volatile.

0(D)	SYNC mode: Enables the SYNC pin to indicate growing power consumption during a transmit burst. You can make use of the signal generated by the SYNC pin, if power consumption is your concern. To do so, ensure that your application is capable of processing the signal. Your platform design must be such that the incoming signal causes other components to draw less current. In short, this allows your application to accommodate current drain and thus, supply sufficient current to the GSM engine if required.
1	LED mode: Enables the SYNC pin to drive a status LED installed in your application according to the specifications provided in [2]. The coding of the LED is described in Section 19.6.1, ME status indicated by status LED patterns.
2	LED mode: Like <mode>=1, but, additionally, enables different LED signalization in SLEEP mode depending on the status of PIN authentication and network registration. Please see AT+CFUN for details on SLEEP mode.

19.6.1 ME status indicated by status LED patterns

The following table lists the possible patterns of status LED behavior, and describes the ME operating status indicated by each pattern if AT^SSYNC parameter <mode>=1 and <mode>=2. To better monitor the operating states while power saving is enabled, we recommend that priority be given to <mode>=2.

During the transition from one LED pattern to another the "on" and/or "off" periods of the LED may vary in length. This is because an event that triggers the change may occur any time and, thus, truncate the current LED pattern at any point.

The statements on LED behavior during SLEEP mode are not applicable if the USB cable is plugged. This is because power saving with connected USB host does not take effect if set with AT+CFUN only. For details see notes provided with AT+CFUN. Therefore, while the USB cable is plugged, the LED is always on and flashes as if the module works at AT+CFUN=1, no matter whether AT^SSYNC=1 or AT^SSYNC=2 is enabled.

Table 19.1: Modes of the LED and indicated ME functions

LED behavior	ME operating status if AT^SSYNC=1	ME operating status if AT^SSYNC=2
Permanently off	ME is in one of the following modes: - POWER DOWN mode - AIRPLANE mode - CHARGE ONLY mode - NON-CYCLIC SLEEP mode - CYCLIC SLEEP mode with no temporary wake-up event in progress [1)]	ME is in one of the following modes: - POWER DOWN mode - AIRPLANE mode - CHARGE ONLY mode
600 ms on / 600ms off	Limited Network Service: No SIM card inserted or no PIN entered, or network search in progress, or ongoing user authentication, or network login in progress.	Same as for AT^SSYNC=1
75 ms on / 3 s off	IDLE mode: The mobile is registered to the GSM network (monitoring control channels and user interactions). No call is in progress.	Same as for AT^SSYNC=1
75 ms on / 75 ms off / 75 ms on / 3 s off	One or more GPRS PDP contexts activated.	Same as for AT^SSYNC=1
500 ms on / 50 ms off	Packet switched data transfer is in progress.	Same as for AT^SSYNC=1
Permanently on	Depending on type of call: Voice call: Connected to remote party. Data call: Connected to remote party or exchange of parameters while setting up or disconnecting a call.	Same as for AT^SSYNC=1
<n> ms on / <n> ms off [2)]	Not possible: With AT^SSYNC=1, LED signalization is disabled in SLEEP mode.	SLEEP mode is activated (AT+CFUN parameter <fun> ≠ 1), but the ME is not registered to the GSM network (e.g. SIM not inserted or PIN not entered, and therefore, either no network service or only Limited Network Service is available.

LED behavior	ME operating status if AT^SSYNC=1	ME operating status if AT^SSYNC=2
25 ms on / 4 * <n> ms off [2]	Not possible: With AT^SSYNC=1, LED signalization is disabled in SLEEP mode.	SLEEP mode is activated (AT+CFUN parameter <fun> ≠ 1) while the ME is registered to the GSM network and in IDLE mode.
25 ms on / <m> ms off / 25 ms on / 3 * <m> ms off [2]	Not possible: With AT^SSYNC=1, LED signalization is disabled in SLEEP mode.	SLEEP mode is activated (AT+CFUN parameter <fun> ≠ 1) while the ME is registered to the GSM network. Additionally, PDP context is activated.

1) When a temporary wake-up event (for example a call, a URC, a packet switched transfer) occurs in CYCLIC SLEEP mode the LED flashes according to the patterns listed above. See Section 2.9.1, Wake up the ME from SLEEP mode for details on the various SLEEP modes and wake-up events.

2) The duration of <n> and <m> depends on the network: In SLEEP mode, the module can only change its LED status during intermittent wake-up periods when listening to paging information from the base station. Therefore the values of <n> and <m> vary as follows:
<n> = value from 471 ms to 2118 ms
<m> = 3000 ms

19.7 AT^SSPI Serial Protocol Interface

The AT^SSPI command enables the module to be connected to external I²C or SPI devices.

The I²C/SPI datastream is mapped through an internal I²C/SPI driver to and from an ASCII hex protocol which can be exchanged with an internal application (JAVA) or an external application via V24.

The AT^SSPI write command configures and activates the I²C/SPI interface and changes from command mode into data mode. All values must be given in hexadecimal format (0 - 9, A - F) without "0x". For details on data mode please refer to Section 19.7.3, Transmitting Data over AT Interface.

Caution:
If I²C or SPI data mode is active the DCD line of the connected serial port goes high.
If I²C or SPI are opened from a Java application be sure to close the I²C or SPI channels before Java terminates.

Syntax

Test Command

AT^SSPI=?

Response(s)

^SSPI:(list of supported <basicConfiguration>s), (list of supported <delayOne>s), (list of supported <delayTwo>s), (list of supported <wordLength>s), (list of supported <extendedSpiConfiguration>s)
OK

Read Command

AT^SSPI?

Response(s)

^SSPI: <connectionState>, <basicConfiguration>, <delayOne>, <delayTwo>, <wordLength>, <extendedSpiConfiguration>
OK
ERROR
+CME ERROR: <err>

Write Command

AT^SSPI=[<basicConfiguration>[, <delayOne>[, <delayTwo>[, <wordLength>[, <extendedSpiConfiguration>]]]]]

Response(s)

CONNECT
(indicates that ME has entered data mode)
ERROR
+CME ERROR: <err>

PIN	ASC0	ASC1	USB	MUX1	MUX2	MUX3	Charge	✈	Last
-	+	+	+	+	+	+	-	+	+

Parameter Description

<connectionState>(num)

Parameter returned by the AT^SSPI? read command.
Indicates whether or not the I²C or SPI channel is used. When the channel is open and the ME is in data mode, the read command can only be used if one of the remaining interfaces is available. For example, when the channel was opened on ASC0, you can use ASC1 or the MUX channels to check the status.

[0](&F)	Not connected (channel closed). All following parameters are the factory settings AT^SSPI=0,0010,0000,0000,0000,0000.
1	Connected (channel open, ME in data mode). All following parameters are the values currently used, for example AT^SSPI=1,0010,FFFF,FFFF,0000,0000.

`<basicConfiguration>`(num)

Parameter `<basicConfiguration>` is a 16 bit word which contains four subparameters to control the following functions:

Subparameter	Bit	Hexadecimal	Selected function
Interface type	D15 - D12	0 1	I²C bus (default) SPI device
Port	D11 - D8	0	Internal port
Data transfer rate	D7 - D4	0 1 0 1 2 3 4 5	I²C at 100 kbps I²C at 400 kbps (default) SPI at 100 kbps SPI at 250 kbps SPI at 500 kbps SPI at 1.083 Mbps SPI at 3.25 Mbps SPI at 6.5 Mbps
Protocol	D3 - D0	0	ASCII (hex coding)

`<delayOne>`(num)

I²C: This parameter specifies a delay after each written byte. See Section 19.7.1, Specifying Delay Time for I²C for further details.
SPI: 0000 only.

[0](&F)...FFFF Unsigned 16 bit value

`<delayTwo>`(num)

I²C: This parameter specifies the delay after a each read byte. See Section 19.7.1, Specifying Delay Time for I²C for further details.
SPI: 0000 only.

[0](&F)...FFFF Unsigned 16 bit value

`<wordLength>`(num)

For SPI only:

0000 Length of SPI word = 8 bits

`<extendedSpiConfiguration>`(num)

For SPI only: Parameter `<extendedSpiConfiguration>` is a 16 bit word which contains four subparameters to control the following functions:

Subparameter	Bit	Hexadecimal	Selected function
SPI mode	D15 - D12	0 1 2 3	Four different SPI modes. Phase and polarity of all SPI modes are illustrated in Section 19.7.2, Selecting SPI Mode.
Chip Select (CS) mode	D11 - D8	0	One Chip Select per Transfer Frame.
Arrangement of bytes	D7 - D4	0	Big endian
Bit sequence (arrangement of bits on the SPI)	D3 - D0	0	MSB first

19.7.1 Specifying Delay Time for I²C

The parameters <delayOne> and <delayTwo> are depending on the I²C device connected to the TC65i. If the delay times set with <delayOne> and <delayTwo> are not adequate the connected I²C device might not be able to answer.
The following figures are provided to assist you in specifying appropriate values for both parameters. All delays are relative to the data transfer rate. To calculate the delay use the formula and the values given below.

$$Delay\ (\mu s) = \left(\frac{\text{Delay value}}{\text{Master clock (MHz)}} + \text{Delay\_min (µs)} \right) \times \frac{\text{Default data transfer rate (bps)}}{\text{User data transfer rate (bps)}}$$

Figure 19.1: Formula for calculating the delay

Table 19.2: Values for calculating the delay

Parameter	Values
Delay value	Value set with parameter <delayOne> or <delayTwo>
Master clock	13 MHz
Default data transfer rate	400 bps
User data transfer rate	Value selected with subparameter data transfer rate within <basicConfiguration>, for example 100 kbps or 400 kbps
Delay_min for Write	7.4 µs at 100 kbps 2.0 µs at 400 kbps
Delay_min for Read	9.9 µs at 100 kbps 2.6 µs at 400 kbps

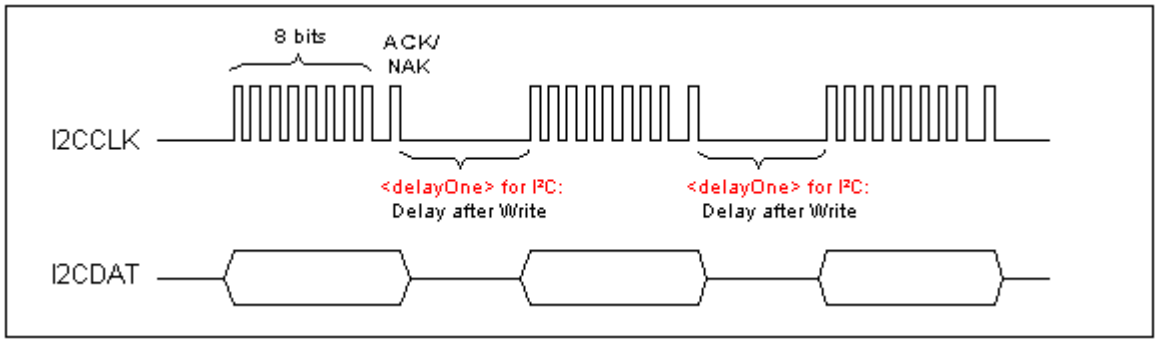

Figure 19.2: Delay time on I²C after Write

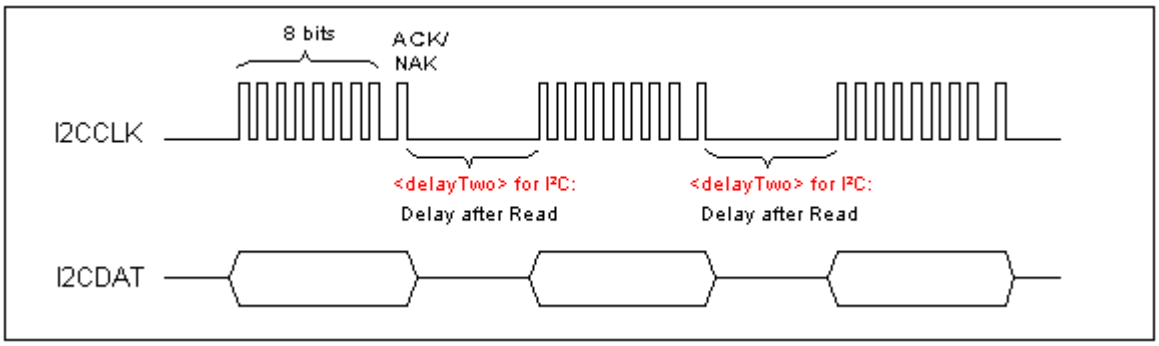

Figure 19.3: Delay time on I²C after Read

19.7.2 Selecting SPI Mode

The figure shows the four types of SPI mode selectable by setting the appropriate hexadecimal value within the parameter <extendedSpiConfiguration>.

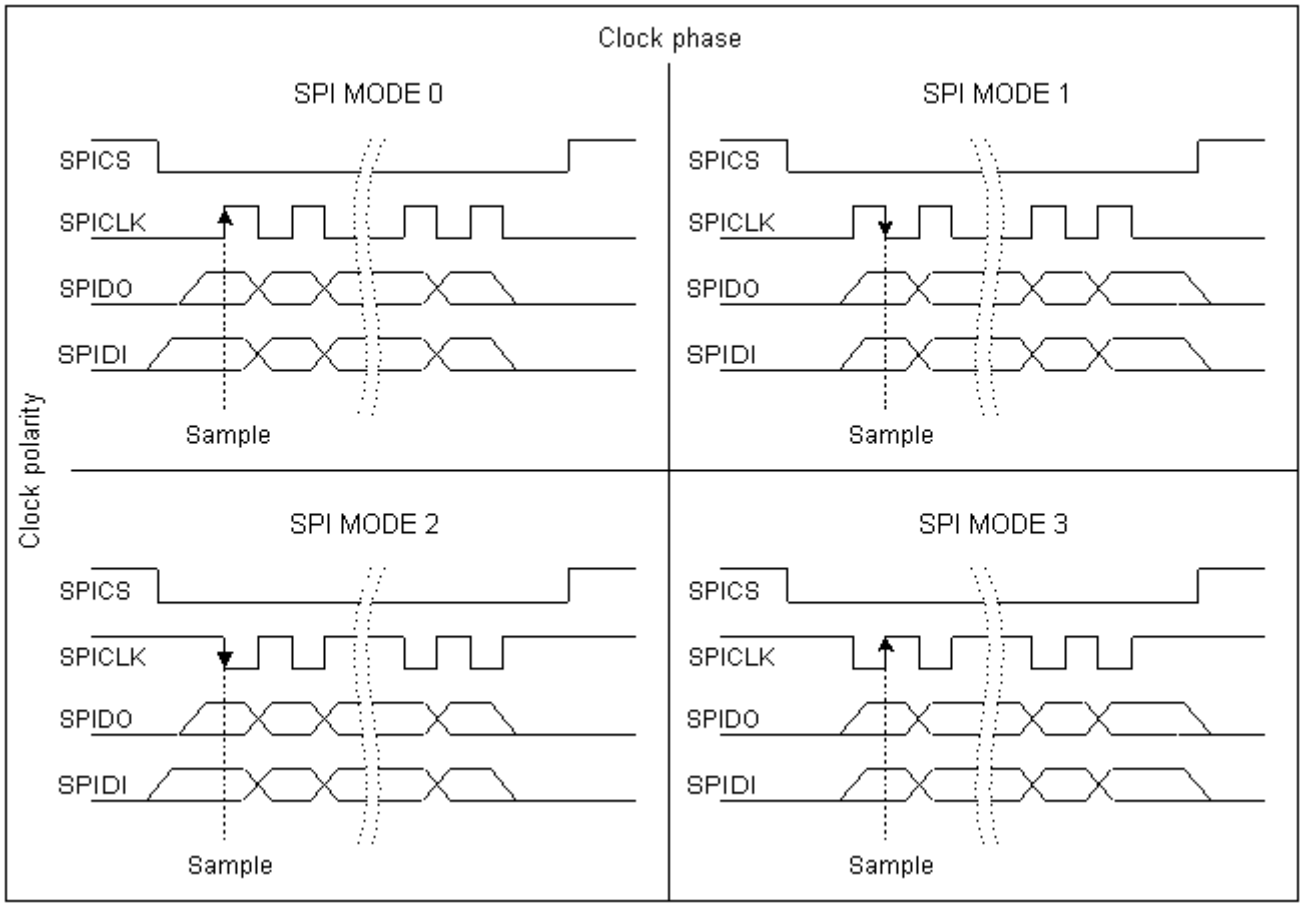

Figure 19.4: SPI modes selectable on SPI

19.7.3 Transmitting Data over AT Interface

This section provides information on the protocol used for data transmission to or from I²C/SPI devices and explains the data mode. It is assumed that you are familiar with the I²C specification.
Throughout this section the following document conventions are used to mark the direction of send and receive:
Transfer Message: AT → I²C or SPI device driver
Response Message: AT ← I²C or SPI device driver

Channel Open / Close:
To change from command mode to data mode use the AT^SSPI write command. To close down the channel and return to command mode send the ASCII code # (0x23).

ASCII Protocol for I²C or SPI communication over AT interface:
The protocol allows using a Terminal program for the communication between the module and the I²C slave device/SPI device. To visualize transferred characters and response data it is recommended to run the Terminal program in chat mode or to switch on local echo.
For transfer and response, special characters are defined, such as Start and Stop to mark a single message and Close to disconnect the data channel. All valid special characters are listed below:

Table 19.3: Special characters for ASCII coding

Direction AT - Driver	Function in protocol	Special character	Hex value	Description
→	Start Transfer Message	<	0x3C	Special character sent to the I²C/SPI driver to start sending.
→	Stop Transfer Message	>	0x3E	Special character sent to the I²C/SPI driver to stop sending.
→	Channel Close	#	0x23	For signalling. Channel Close can be sent any time inside or outside a transmit or receive message. Causes the transfer to be aborted and takes the ME back to AT command mode.
←	Start Response Message	{	0x7B	Special character sent to the I²C/SPI driver to mark the beginning of a Response Message.
←	Stop Response Message	}	0x7D	Special character sent to the I²C/SPI driver to mark the end of a Response Message.
←	Protocol error	!	0x21	For signalling. Reports to the AT interface that the Transfer Frame does not comply with the protocol definition (syntax error).
←	Transmission OK (in I²C protocol referred to as ACK)	+	0x2B	Notifies the AT interface that data were successfully transmitted or, on the I²C bus, the I²C Slave Address was recognized.
On I²C bus only:				
←	Transmission error (in I²C protocol referred to as NAK)	-	0x2D	Notifies the AT interface that data transmission failed or the I²C Slave Address was not recognized. On the I²C bus, the faulty data byte (16 bit byte counter) is identified as well.

Message syntax:
Each Message consists of a Start and Stop character, a Message-ID, further protocol data and user data. The notation of all elements is explained below:

Notation of Message-ID:

- All ASCII characters between 0x00...0x7F. It is recommended to use only the characters 0...9, A...Z, a...z.
- Length of the Message-ID: only one character

Notation of protocol data (except Message-ID) and user data:

- Hex (0...9, a...f, A...F)
- Without "0x" (0x01 →01)
- Each hex value consists of 2 characters (1 →01)
- Without delimiters such as comma, semicolon, space etc. (0xAE 0x01 0xA5 →AE01A5)
- In a Transfer Message, the number of all characters after the Message ID shall be even. If it is odd, a protocol error will be reported. On the I²C bus, this applies to the I²C Slave Address and all subsequent written user data. On the SPI this applies to the Read Offset Byte and the Read Length and, if available, all written user data. (Keep in mind that the number of all characters transmitted between Start "<" and Stop ">" of the Transfer Frame shall always be odd because the ID is one character only.)
- Length of I²C Slave Address and user data: ≤ 2048 bytes

The first element of each message is the Start character ("<" for Transfer, "{" for the Response). Accordingly, the last character of a message is the Stop character (">" for Transfer, "}" for the Response).

The second element of each message is the Message ID (1 character). The Message ID serves the user to distinguish between different messages. It is only relevant on protocol level (between AT interface and I²C device driver), i.e. it is not sent to the I²C slave device.

Each transfer to the device is followed by a Response Message sent from the driver to the AT interface. The response includes the Message ID and either OK ("+") or error characters ("-" or "!"). A successful response to a Read Message contains the OK character and the read data. If an error occurs on the I²C bus, the response consists of an error character followed by a 16 bit code specifying the faulty byte.

After each Transfer Message, wait for the Response Message before sending the next Transfer Message.

All characters entered outside a valid message (i.e. not input between Start character "<" and Stop character ">") are ignored.

19.7.3.1 Structure of Messages on the I²C Bus

Table 19.4: Structure of Transfer and Response Messages on the I²C bus

Frame	Format
Write Transfer Message	< *ID SlaveAddress Data* > Maximum length: 2048 bytes for I²C Slave Address and written data. LSB of I²C Slave Address = "0".
Read Transfer Message	< *ID SlaveAddress ReadLength* > Read Length ≤ 2048 bytes. LSB I²C of Slave Address = "1".
Response Message Write OK Read of x bytes OK NAK for x^{th} byte if Read or Write Protocol error in x^{th} byte	 {*ID* + } {*ID* + *Data* } {*ID* - *xxxx* } {*ID* ! *xxxx* }

On the I²C bus, read and write data are handled in two separate frames transmitted one after the other. This is because the I²C bus has only two bus lines, I2CDAT (I2CDAT_SPIDO) for the serial data and I2CCLK (I2CCLK_SPICLK) for the serial clock. Write data are packed into a Transfer Frame. Read data are packed into

a Response Frame. The Transfer Frame contains a Receive or Transmit Request (R/W Request) for the I²C master.

In a Transfer Message (Read or Write), the third element is the 7-bit I²C Slave Address (2 characters) that identifies each single device connected to the bus. The 8th bit of this byte is the LSB that determines the direction of the message. If the LSB is "0" the master will write information to the selected slave. If the LSB is "1" the master will read information sent from the slave.

In a Read Transfer Message on the I²C bus, the size of the expected data must be specified explicitly. This is an element of 4 characters stating the number of bytes to be read. It must be placed after the I²C Slave Address.

19.7.3.2 Structure of Messages on the SPI

Table 19.5: Structure of Transfer and Response Messages for SPI

Message	Format
Transfer Message	< *ID ReadOffset ReadLength Data* > Read Offset = 8 bits Read Length = 16 bits Read Offset + Read Length ≤ 2048 bytes Max. length of read data: 2048 bytes
Response Message Write OK Reading x bytes was OK Protocol error in xth byte	 {*ID* +} {*ID* + *Data* } {*ID ! xxxx* }

The SPI has two serial data lines, DO (I2CDAT_SPIDO) for sending data from the master to the slave, and DI (SPIDI) for receiving data sent from the slave to the master. Both data lines are controlled by one serial clock line CLK (I2CCLK_SPICLK). TC65i acts as master providing the clock. Write and read data are handled in the same Transfer Messages and Response Messages. In a Transfer Message, the next two elements after the ID are the Read Offset and the Read Length, both required to enable reading data from the slave. The Read Offset specifies where to start reading, i.e. which byte is the first to start reading from. If the Read Offset is zero then reading starts from the first byte. The Read Length specifies the number of expected bytes. If the Read Offset is zero and the Read Length does not equal zero, the master reads the specified number of bytes, starting from the first byte. If the Read Length is zero, the Read Offset is ignored, meaning that the master will not read data from the slave. To transmit data from the master to the slave all data can be entered after the Read Length.

In a Response Message the ID is followed by a special character to indicate the result of reading. If successful, "+" is given, followed by the read data. If reading fails only "!" is received.

19.7.4 Error Handling on the I²C Bus

Protocol error:
If a protocol error is detected the ASCII value "!" is sent to the AT interface. Also, a Stop Condition is sent to the I²C device.
A protocol error occurs if

- any data / address characters do not equal 0...9, a...f and A...F
- the length of a read word is smaller or greater than 16 bits
- the number of ASCII data is odd (e.g. "af1" instead of "af01")
- the Read or Write request is greater than 2 KB (0x0800).

Acknowledge:
Once a transmission has completed successfully (Write or Read), the special character "+" (ACK) is included in the Response sent to the AT interface.
During a Write Transfer, the I²C driver acknowledges each transferred byte, but the Response contains only one ACK which is transmitted only if all bytes are successfully transferred. During a Read Transfer, an ACK is sent

when the I²C slave device notifies that it has recognized the I²C Slave Address.

Not Acknowledge:
During a Transmit Transfer, a NAK is given when the I²C Slave Device notifies a failure to receive either the I²C Slave Address or a data byte. In this case, a Stop Condition is sent to the I²C device.
During a Receive Transfer, a NAK is transmitted only when the I²C does not receive any reponse for the I²C Slave Address. The I²C device never acknowledges the validity of the received data (by sending an ACK the master acknowledges each received byte to the slave).

19.7.5 Example: Using I²C Bus

As stated above, it is recommended to run the Terminal program in chat mode or to use the local echo. First, activate the I²C interface:

AT^SSPI=0010,0000,0000,0000,0000 CONNECT	The first group of characters forms the <basicConfiguration>, where the first "0" sets I²C, the second "0" is the internal port, the digit "1" sets 400 kbps bit rate on the I²C bus, and the next "0" selects ASCII coding. This is followed by a comma and the value "0000" = no delay time after Write and Read. Note: If omitted all above parameters are assumed by default. Therefore, instead of AT^SSPI=0010,0000,0000 it is sufficient to enter only AT^SSPI=

The module is in data mode now. This allows you to send a Write Transfer Message:

<aAE000102030405060708090A0B0C0D0E0F>	Write Transfer Frame, where a = ID, AE = Slave Address and write request.
{a+}	Write Response Message, where a = ID.
<bAF0010>	Read Transfer Message, where b = ID, AF = Slave Address and read request, 0010 = number of expected bytes.
{b+000102030405060708090A0B0C0D0E0F}	Read Response Message, where b = ID.

To quit data mode and return to command mode enter the Close character "#":

# OK	The response OK confirms that the ME is back to command mode and ready to accept any AT commands.

If the ME is in command mode, the response to the read command contains the factory settings.

AT^SSPI? AT^SSPI=0,0010,0000,0000 OK	The read command returns the connection state "not connected" (Channel closed) and the factory settings for I²C.

If the ME is in data mode, the response to the read command contains the current settings.

AT^SSPI? AT^SSPI=1,0010,0012,00FF,0000,0000 OK	The read command returns the connection state "connected" (Channel open) and the current settings for I²C.

19.7.6 Example: Transfer and Response Messages on SPI

The following examples shall illustrate the message structure and write/read procedures explained in Section 19.7.3.2, Structure of Messages on the SPI. Blanks are inserted only to better visualize frame elements. In practice no blanks are allowed.

`<0 00 0000 11 22 33>`	Transfer Message: The master writes 3 bytes.
`{0 +}`	Response Message: Transmission successful.
`<1 00 0010>`	Transfer Message: The master requests to read 16 bytes from the slave. Read Offset is zero, therefore, reading starts from the first byte.
`{1 + 11 22 33 44 ... FF 00}`	Response Message: Reading data successful.
`<2 03 0008>`	Transfer Message: The master requests to read 8 bytes from the slave. Read Offset is 3, therefore, reading starts from the fourth byte.
`{2 + 44 55 66 77 88 99 AA BB}`	Response Message: Reading data successful.
`<3 03 0004 11 22 33 44 55 66>`	Transfer Message: The master writes 6 bytes and requests to read 4 bytes from the slave. Read Offset is 3, therefore, reading starts from the fourth byte.
`{3 + AA BB CC DD}`	Response Message: Reading and writing data successful.

19.8 AT^SAADC Show ADC Adjustment Values

The AT^SAADC command is intended only for the TC65i Terminal. It returns TC65i Terminal specific values needed to recalculate the raw values captured with AT^SRADC in order to obtain the actual voltage applied at the ADCx_IN input of the Terminal. The recalculation is necessary to account for the effect of component tolerances, mainly caused by the measurement amplifier inside the TC65i Terminal. The amplifier is used to scale down the ADCx_IN input voltage of the TC65i Terminal (5V) to the ADCx_IN input voltage of the in-built TC65i Module (2.4V).

To recalculate the exact voltages measured at the ADC1_IN input use the following equation:
Value = (<value> from AT^SRADC - <ofs1>) * <amp1> / 4096
where the divisor 4096 is constant. For ADC2_IN use the equivalent parameters <ofs2> and <amp2>.

The voltage offset and the amplification factor are specific to each TC65i Terminal. The values are stored in the device and are not changeable. Therefore, it is necessary to read the values only once in the lifetime of the TC65i Terminal. ADC1_IN and ADC2_IN may have different offset values and amplification factors.

Syntax

Read Command

```
AT^SAADC?
```

Response(s)

```
^SAADC: <ofs1>, <amp1>, <ofs2>, <amp2>
OK
ERROR
+CME ERROR: <err>
```

PIN	ASC0	ASC1	USB	MUX1	MUX2	MUX3	Charge	✈	Last
-	+	+	+	+	+	+	-	+	-

Parameter Description

<ofs1>(num)

Offset in mV to be deducted from the measurement <value> captured with AT^SRADC at ADC1_IN.

-32768...+32767

<amp1>(num)

Amplification factor for ADC1_IN

0...65535	The amplification factor is given as 16 bit unsigned integer. An amplification factor of 1 equals 4096, an amplification factor of 2 equals 8192 etc. The TC65i Terminal has typically an amplification factor around 2. See example below.

<ofs2>(num)

Offset in mV to be deducted from the measurement <value> captured with AT^SRADC at ADC2_IN.

-32768...+32767

<amp2>(num)

Amplification factor for ADC2_IN

0...65535	See <amp1> for further detail.

Example

The example shows how to determine the voltage actually measured at ADC1_IN of the TC65i Terminal. First, find out the voltage offset and the amplification factor required for the recalculation of all later measurements done with AT^SRADC:

AT^SAADC? ^SRADC: 3,8533,2,8000 OK	Query voltage offsets and amplification factors. The ADC1_IN line of the TC65i Terminal has the following values: voltage offset <ofs1>= 3mV and <amp1>= 8533 which equals an amplification factor of 2.083251953125. The values of ADC2_IN are not relevant for this example.

Measure the voltage applied at ADC1_IN:

AT^SRADC=0 ^SRADC: 0,1,433 OK	Open the ADC1_IN channel and query the voltage applied. The voltage measured at ADC1_IN is 433mV.

Now recalculate the value captured with AT^SRADC:

Value = (433 - 3) * 8533 / 4096 = 895.8mV	The actual voltage measured at ADC1_IN is 895.8mV.

19.9 AT^SRADC Configure and Read ADC Measurement

The AT^SRADC controls the module's Analog-to-Digital Converter. The ADC can be used to measure the voltage of external devices connected to the ADC inputs. The AT^SRADC configures the parameters required for ADC measurement and returns the measurement result(s). The value(s) can be delivered once on request by using the single measurement mode, or periodically by specifying the measurement interval.

Note that the TC65i Module uses an unbalanced input with two pins. This requires different pin names as listed below. See also [2]
First ADC channel of TC65i Module: ADC1_IN.
Second ADC channel of TC65i Module: ADC2_IN.

Syntax

Test Command

```
AT^SRADC=?
```

Response(s)

```
^SRADC:(list of supported <ch>s), (list of supported <oc>s), (list of supported <it>s)
OK
```

Read Command

```
AT^SRADC?
```

Response(s)

Current settings of first and second ADC channel:

```
^SRADC: <ch>, <oc>, <it>
^SRADC: <ch>, <oc>, <it>
OK
```

Write Command

Single measurement. Implies automatic channel open and close (<oc>=1 and 0) and no interval (<it>=0).

```
AT^SRADC=<ch>
```

Response(s)

```
^SRADC: <ch>, <count>, <value>
OK
ERROR
+CME ERROR: <err>
```

Write Command

Periodic measurement. Requires <oc>=1 and <it>=100ms...30000ms

```
AT^SRADC=<ch>, <oc>, <it>
```

Response(s)

```
OK
ERROR
+CME ERROR: <err>
```

PIN	ASC0	ASC1	USB	MUX1	MUX2	MUX3	Charge	✈	Last
-	+	+	+	+	+	+	-	+	-

Unsolicited Result Code

URC indicating the used channel, the number of measured samples and the voltage. Applies only if periodic measurement mode is enabled.

```
^SRADC: <ch>, <count>, <value>[, <value>[, <value>[, <value>[, <value>[, <value>[,
<value>[, <value>[, <value>[, <value>[, <value>]]]]]]]]]]
```

Parameter Description

<ch>(num)	
Select ADC channel	
0	First ADC channel (ADC1_IN at TC65i Module.)
1	Second ADC channel (ADC2_IN at TC65i Module.)

<oc>(num)	
Open or close ADC channel	
[0]	Close ADC channel specified with <ch>
1	Open ADC channel specified with <ch>

<it>(num)	
Measurement interval	
[0]	Single measurement mode
100...30,000	Output interval in ms at steps of 60/13 ms to enable periodic measurement mode.

<value>(num)	
Measurement value	
-25...+2425	Measured voltage in mV Resolution: 1mV Accuracy (typ.): 2mV The captured value is the actual voltage applied at the ADCx_IN input. No further calculation is required.

<count>(num)	
1...11	Number of measured samples In single measurement mode: <count> is always 1. In periodic measurement mode: <count> is number of <value>s indicated by each URC "^SRADC". The higher the sample rate set with <it>, the more measured values are reported within the URC "^SRADC".

Notes

- If power saving is enabled with AT+CFUN, take into account that the periodic mode lets the ME consume current each time the measurement is performed. This reduces the effect of power saving and thus decreases the operation time.
- If an AT command is input on the same interface where the periodic measurement mode is on, up to 5 "^SRADC" URCs are queued up and sent after AT command completion.
  If more than 5 URCs occur before the AT command is completed their measurement values are lost. In this case, one additional URC with a negative <count> and the single value "32767" is sent along with the first 5 buffered URCs. The negative <count> indicates the number of lost measurement values (not the number of URCs). See example below.

Examples

EXAMPLE 1

Single measurement

AT^SRADC=0	Open the first ADC channel for single measurement.
^SRADC: 0,1,2375	
OK	

EXAMPLE 2

Periodic measurement at low sample rate (5s):

AT^SRADC=0,1,5000	Start periodic measurement mode on the first ADC channel. Samples are taken every 5s. Every 5s the URC "^SRADC" appears to report the measured voltages. The second parameter represents the number of measured samples, in this case only one.
^SRADC: 0,1,2375	
^SRADC: 0,1,2375	
^SRADC: 0,1,2375.	
^SRADC: 0,1,2375AT^SRADC=0,0	Stop the periodic measurement.
OK	

EXAMPLE 3

Periodic measurement at high sample rate (250ms):

AT^SRADC=0,1,250	Start periodic measurement on the first ADC channel. Samples are taken every 250ms. Every second a URC "^SRADC" appears to report the measured voltage. The number of samples is 4 or 5.
^SRADC: 0,4,2375,2375,2375,2375	
^SRADC: 0,4,2375,2375,2375,2375	
^SRADC: 0,5,2375,2375,2375,2375,2375	
^SRADC: 0,4,2375,2375,2375,2375AT^SRADC=0,0	
OK	Stop the periodic measurement.

EXAMPLE 4

Handling of "^SRADC" URCs and AT command execution on the same interface:

AT^SRADC=0,1,250	Start periodic measurement mode on the first ADC channel. Samples are taken every 250ms.
^SRADC: 0,4,2375,2375,2375,2375	
^SRADC: 0,5,2375,2375,2375,2375,2375	
^SRADC: 0,4,2375,2375,2375,2375	
^SRADC: 0,4,2375,2375,2375,2375AT^SRADC?	Input of AT command and <CR> takes 4s.
^SRADC: 0,1,250	
^SRADC: 1,0,0	
OK	
^SRADC: 0,4,2375,2375,2375,2375	4 URCs were buffered during command input and sent after completion.
^SRADC: 0,4,2375,2375,2375,2375	
^SRADC: 0,4,2375,2375,2375,2375	
^SRADC: 0,4,2375,2375,2375,2375	
^SRADC: 0,4,2375,2375,2375,2375	More URCs are delivered.
^SRADC: 0,4,2375,2375,2375,2375	
^SRADC: 0,4,2375,2375,2375,2375	
^SRADC: 0,4,2375,2375,2375,2375	
^SRADC: 0,4,2375,2375,2375,2375AT^SRADC?	Input of AT command and <CR> takes 7s.
^SRADC: 0,1,250	
^SRADC: 1,0,0	
OK	
^SRADC: 0,4,2375,2375,2375,2375	5 URCs were buffered during command input and sent after completion, another 2 URCs are lost.
^SRADC: 0,4,2375,2375,2375,2375	
^SRADC: 0,4,2375,2375,2375,2375	
^SRADC: 0,4,2375,2375,2375,2375	
^SRADC: 0,4,2375,2375,2375,2375	
^SRADC: 0,-8,32767	The URC indicates 8 lost measurement results.
^SRADC: 0,4,2375,2375,2375,2375	More URCs are delivered.
^SRADC: 0,4,2375,2375,2375,2375	
.....	

19.10 AT^SWDAC Configure and Read PWM Signal for DAC

The AT^SWDAC controls the PWM (Pulse Width Modulation) signals generated by means of the DAC_OUT pin of the TC65i Module.

Syntax

Test Command

```
AT^SWDAC=?
```

Response(s)

```
^SWDAC:(list of supported <dc>s), (list of supported <oc>s), (list of supported <fq>s)
OK
```

Read Command

```
AT^SWDAC?
```

Response(s)

```
^SWDAC: <dc>, <oc>, <fq>
OK
ERROR
+CME ERROR: <err>
```

Write Command

```
AT^SWDAC=<dc>[, <oc>[, <fq>]]
```

Response(s)

```
OK
ERROR
+CME ERROR: <err>
```

PIN	ASC0	ASC1	USB	MUX1	MUX2	MUX3	Charge	✈	Last
-	+	+	+	+	+	+	-	+	-

Parameter Description

<dc>(num)

Duty cycle in percentage steps

0...100

<oc>(num)

Open or close DAC

0	Close DAC
1	Open DAC

<fq>(num)

PWM frequency

0	320 Hz (accuracy of 1 percentage step)
1	970 Hz (accuracy of 3 percentage steps)
2	8,125 Hz (accuracy of 1 percentage step)
3	16,250 Hz (accuracy of 1 percentage step)
4	32,500 Hz (accuracy of 1 percentage step)
5	65,000 Hz (accuracy of 2 percentage steps)

Example

This example shows how to open the DAC_OUT output and change the duty cycle while using the same frequency.

AT^SWDAC=50,1,2	Initial opening of DAC_OUT, while setting PWM signal to 8,125 Hz at 50% duty cycle.
OK	
AT^SWDAC=75	Change duty cycle of the open DAC_OUT output.
OK	
AT^SWDAC=80	Change duty cycle of the open DAC_OUT output.
OK	
AT^SWDAC=0,0	Close DAC_OUT.
OK	

20. GPIO Commands

This chapter describes the AT commands needed to access and configure the GPIO pins of the TC65i.

Please also refer to [2] for electrical specifications of the GPIOs and their signal states after startup and during application.

Except for the pulse counter commands, usage of all GPIO commands is restricted to the same interface where the GPIO driver was openend with AT^SPIO. Any attempt to access GPIOs from another interface will be denied with an error message.

When the TC65i starts up, all GPIO pins are set to high-impedance state after initializing. Therefore, it is recommended to connect pull-up or pull-down resistors to all GPIO pins you want to use as output. This is necessary to keep these pins from floating or driving any external devices before all settings are done by AT command (at least AT^SPIO, AT^SCPIN), and after closing the GPIOs again.

20.1 AT^SPIO General Purpose IO Driver Open/Close

The AT^SPIO write command opens and closes the general purpose IO driver. The command must be executed before any other GPIO command can be used. After closing the driver, all pins used (i.e. opened) will be put into high impedance state (inputs) with no internal pull up or down.

The command does not reserve any general purpose IO pin, only the drivers required for GPIO pin management will be loaded.

Syntax

Test Command

```
AT^SPIO=?
```

Response(s)

```
^SPIO:(list of supported <mode>s)
OK
```

Write Command

```
AT^SPIO=<mode>
```

Response(s)

```
OK
ERROR
+CME ERROR: <err>
```

PIN	ASC0	ASC1	USB	MUX1	MUX2	MUX3	Charge	✈	Last
-	+	+	+	+	+	+	-	+	-

Parameter Description

<mode>(num)	
0	Close General purpose IO driver
1	Open General purpose IO driver

20.2 AT^SCPIN Pin Configuration

The AT^SCPIN write command serves to add (or remove) and configure pins.

Syntax

Test Command

AT^SCPIN=?

Response(s)

^SCPIN: (list of supported <mode>s), (list of supported <pin_id>s), (list of supported <direction>s), (list of supported <startValue>s)
OK

Write Command

AT^SCPIN=<mode>, <pin_id>, <direction>[, <startValue>]

Response(s)

OK
ERROR
+CME ERROR: <err>

PIN	ASC0	ASC1	USB	MUX1	MUX2	MUX3	Charge	✈	Last
-	+	+	+	+	+	+	-	+	-

Parameter Description

<mode>(num)

0	Close pin
1	Open pin

<pin_id>(num)

Pin identifier

0	GPIO1
1	GPIO2
2	GPIO3
3	GPIO4
4	GPIO5
5	GPIO6
6	GPIO7
7	GPIO8
8	GPIO9
9	GPIO10 The GPIO10 pin can be used either as GPIO or as pulse counter. If configured as GPIO, the pulse counter option cannot be enabled. Vice versa, if configured as pulse counter the GPIO option is not available. See AT^SCCNT and AT^SSCNT for further details on the pulse counter.

<direction>(num)	
Parameter <direction> is mandatory when opening a pin, but can be omitted when closing a pin	
0	Input
1	Output

<startValue>(num)	
Can be set only for outputs.	
[0]	Low
1	High

Notes

- For closing a pin with the write command (<mode>=0), the parameter <direction> is not needed.
- Before changing the configuration of a pin be sure to close the pin.

20.3 AT^SCPOL Polling Configuration

The AT^SCPOL write command serves to start and stop polling a pin or port specified with <io_id>. The pin or port must already be configured via AT^SCPIN or AT^SCPORT. Polling is only applicable to input pins.

After polling has been activated on a specified pin or port, all new values related to this pin or port will be reported via the "^SCPOL" URC.

Syntax

Test Command

AT^SCPOL=?

Response(s)

^SCPOL: (list of supported <mode>s), (list of supported <io_id>s)
OK

Write Command

AT^SCPOL=<mode>, <io_id>

Response(s)

OK
ERROR
+CME ERROR: <err>

PIN	ASC0	ASC1	USB	MUX1	MUX2	MUX3	Charge	✈	Last
-	+	+	+	+	+	+	-	+	-

Unsolicited Result Code

^SCPOL: <io_id>, <value>

Parameter Description

<mode>(num)

0	Suppress polling
1	Activate polling

<io_id>(num)

This can be either a <pin_id> already configured or a <port_id> already opened.

<value>(num)

New value on this <io_id>.

0	Low for <pin_id>
1	High for <pin_id>
0...1023	For <port_id>

Notes

- The pins will be polled at every TDMA frame interrupt, i.e. every 4.616ms. In SLEEP mode, the frequency of polling is reduced, as polling will be done only when the module shortly suspends power saving when CTS is activated. So in SLEEP mode polling intervals are extended to a range from 0.9s to 2.7s.
  After a state change has been detected the "^SCPOL" URC is issued if the state of the pin remains stable for 8 TDMA frames (= 36.93ms) with 10% tolerance in Normal mode, or accordingly, 0.9s to 2.7s in SLEEP mode. The maximum frequency of changing of the pin state that can be detected is 11 Hz.

- If the <value> of one or more of the polled pins has changed since polling has been performed last time, or since a particular pin or its entire port have last been queried with AT^SGIO, polling will be suspended to send a URC. There will be one URC reported for each polled pin whose <value> has changed, and one for each polled port with one or more changed pins.

20.4 AT^SCPORT Port Configuration

With AT^SCPORT a group of maximum 10 pins can be configured to act as a parallel port, which can be controlled with a single AT command. A pin can only be added once to a port, and only to a port. The first, i.e. left most parameter, corresponds to the port's LSB.
All pins of a port must be set to the same direction (input or output). See AT^SCPIN.

Syntax

Test Command

```
AT^SCPORT=?
```

Response(s)

```
OK
```

Write Command

```
AT^SCPORT=<pin_id>1[, <pin_id>2[, <pin_id>3[, <pin_id>4[, <pin_id>5[, <pin_id>6[, <pin_id>7[, <pin_id>8[, <pin_id>9[, <pin_id>10]]]]]]]]]
```

Response(s)

```
^SCPORT: <port_id>
OK
ERROR
+CME ERROR: <err>
```

PIN	ASC0	ASC1	USB	MUX1	MUX2	MUX3	Charge	✈	Last
-	+	+	+	+	+	+	-	+	-

Parameter Description

<port_id>(num)

Assigned port

<pin_id>(num)

Pin ID of the xth pin of this port

See AT^SCPIN for possible pin value.

20.5 AT^SDPORT Delete a Port Configuration

The AT^SDPORT write command removes a parallel port. The pins of the port remain open and can be added to a new port.

Syntax

Test Command

AT^SDPORT=?

Response(s)

(list of supported <port_id>s)
OK

Write Command

AT^SDPORT=<port_id>

Response(s)

OK
ERROR
+CME ERROR: <err>

PIN	ASC0	ASC1	USB	MUX1	MUX2	MUX3	Charge	✈	Last
-	+	+	+	+	+	+	-	+	-

Parameter Description

<port_id>(num)

ID of the port to be closed

20.6 AT^SGIO Get IO state of a specified pin or port

Syntax

Test Command

```
AT^SGIO=?
```

Response(s)

```
^SGIO:(list of supported <io_id>s)
OK
```

Write Command

```
AT^SGIO=<io_id>
```

Response(s)

```
^SGIO: <value>
OK
ERROR
+CME ERROR: <err>
```

PIN	ASC0	ASC1	USB	MUX1	MUX2	MUX3	Charge	✈	Last
-	+	+	+	+	+	+	-	+	-

Parameter Description

`<io_id>`(num)

This can be either an already configured `<pin_id>` or an already opened `<port_id>`.

`<value>`(num)

State read on this `<io_id>`.

0	Low for `<pin_id>`
1	High for `<pin_id>`
0...1023	For `<port_id>`

Note

- If one gets the state of a port whose width is less than 10 bits, the bits of `<value>` that are more significant than the MSB of the port are set to zero.

20.7 AT^SSIO Set IO state of a specified pin or port

Syntax

Test Command

```
AT^SSIO=?
```

Response(s)

```
^SSIO: (list of supported <io_id>s), (list of supported <value>s)
OK
```

Write Command

```
AT^SSIO=<io_id>, <value>
```

Response(s)

```
OK
ERROR
+CME ERROR: <err>
```

PIN	ASC0	ASC1	USB	MUX1	MUX2	MUX3	Charge	✈	Last
-	+	+	+	+	+	+	-	+	-

Parameter Description

<io_id>(num)

This can be either an already configured <pin_id> or an already opened <port_id>.

<value>(num)

State to be set for this <io_id>.

0	Low for <pin_id>
1	High for <pin_id>
0...1023	For <port_id>

Notes

- If you set a state on a port whose width is less than 10 bits, the bits of <value> that are more significant than the MSB of the port are ignored.
- The write command is only applicable to <pin_id>s or <port_id>s which are configured as output.

20.8 AT^SCCNT Configure Pulse Counter

The AT^SCCNT write command serves to configure the GPIO10 pin as pulse counter. The pulse counter is designed to measure signals from 0 to 1000 pulses per second.

Remember that if the GPIO10 line is configured as GPIO (see AT^SCPIN) any attempt to activate the pulse counter will be rejected. Vice versa, if the pulse counter is opened the GPIO10 line cannot be configured as GPIO.

See also [2] for further detail on the pulse counter.

Syntax

Test Command

```
AT^SCCNT=?
```

Response(s)

```
^SCCNT:(list of supported <action>s), (list of supported <mode>s), (list of supported <limit>s)
OK
```

Read Command

```
AT^SCCNT?
```

Response(s)

```
^SCCNT: <action>, <mode>[, <limit>]
OK
ERROR
+CME ERROR: <err>
```

Write Command

```
AT^SCCNT=<action>, <mode>[, <limit>]
```

Response(s)

```
OK
ERROR
+CME ERROR: <err>
```

PIN	ASC0	ASC1	USB	MUX1	MUX2	MUX3	Charge	✈	Last
-	+	+	+	+	+	+	-	+	-

Unsolicited Result Code

```
^SCCNT: <time>
```

The URC applies only to the Limit counter mode set with parameter <mode>=1. It is delivered once the pulse counter has completed counting the number of pulses requested with parameter <limit>.

Parameter Description

<action>(num)	
0	Close pulse counter
1	Open pulse counter

<mode>(num)	
0	Activates the Start-Stop counter mode. After setting this mode, use AT^SSCNT and the <action> parameter to start or stop the pulse counter or to read out the measured pulses.
1	Activates the Limit counter mode and immediately starts the pulse counter. Parameter <limit> is mandatory for this mode.

<limit>(num)	
1...65534	Number of pulses to be counted. Parameter <limit> applies only to the Limit counter mode and is mandatory for this mode. Once the given number of pulses is reached, the ME sends one single URC "^SCCNT" which indicates the parameter <time>.

<time>(num)	
1...4294967295	Time (in milliseconds) taken to count the number of pulses specified with <limit>.

Note

- Measurement accuracy: In Limit counter mode, the parameter <time> implies an inaccuracy <5ms.

20.8.1 Using the Pulse Counter in Limit Counter Mode

This example assumes that a 1 kHz frequency is applied at the GPIO10 pin. Limit counter mode is enabled to request the time the pulse counter needs to count a specified number of pulses.

at^sccnt=1,1,1000	Open pulse counter, enable Limit counter mode, request the time needed to count 1000 pulses.
OK	
^SCCNT: 0000001047	"^SCCNT" URC indicates the time taken to count 1000 pulses.
at^sccnt=1,1,2000	Open pulse counter, enable Limit counter mode, request the time needed to count 2000 pulses.
OK	
^SCCNT: 0000002040	"^SCCNT" URC indicates the time taken to count 2000 pulses.
at^sccnt=1,1,10000	Open pulse counter, enable Limit counter mode, request the time needed to count 10000 pulses.
OK	
^SCCNT: 0000010043	"^SCCNT" URC indicates the time taken to count 10000 pulses.
at^sccnt=1,1,20000	Open pulse counter, enable Limit counter mode, request the time needed to count 20000 pulses.
OK	
^SCCNT: 0000020040	"^SCCNT" URC indicates the time taken to count 20000 pulses.

This example shows how to stop the Limit counter mode and close the pulse counter without waiting for the "^SCCNT" URC. Both methods have the same effect, it is up to you which one to use.

at^sccnt=0,0	Stop and close the pulse counter immediately, without "^SCCNT" URC being indicated.
OK	
at^sscnt=3	Stop and close the pulse counter immediately, without "^SCCNT" URC being indicated.
OK	

20.9 AT^SSCNT Start and Stop Pulse Counter

The AT^SSCNT write command serves to read, start, restart and stop the pulse counter.

Syntax

Test Command

AT^SSCNT=?

Response(s)

^SSCNT:(list of supported <action>s)
OK

Read Command

AT^SSCNT?

Response(s)

^SSCNT: <action>
OK
If an error occurs:
ERROR
+CME ERROR: <err>

Write Command

AT^SSCNT=<action>

Response(s)

If <action>=0 or 1:
OK
If <action>=2 or 3:
OK
"^SSCNT" URC with parameter <pulse>
If an error occurs:
ERROR
+CME ERROR: <err>

PIN	ASC0	ASC1	USB	MUX1	MUX2	MUX3	Charge	✈	Last
-	+	+	+	+	+	+	-	+	-

Unsolicited Result Code

^SSCNT: <pulse>

The URC applies only to the Start-Stop mode set with AT^SCCNT, parameter <mode>=0. It is delivered once the pulse counter result was requested with <action>=2 or the pulse counter was stopped with <action>=3. The URC indicates the number of pulses counted.

Parameter Description

<action>(num)

This parameter can only be used after configuring the pulse counter with AT^SCCNT. The <action> types 0, 1 and 2 apply only to the Start-Stop counter mode set with AT^SCCNT.

0	Reset and start pulse counter from 0.
1	Restart pulse counter and continue counting from the <pulse> value of the last run.
2	Read out current <pulse> value.

3	The effect of value 3 depends on the selected counter mode: If AT^SCCNT, parameter <mode>= 0 (Start-Stop counter mode), then <action> type 3 stops the pulse counter and displays, as "^SSCNT" URC, the number of pulses counted until this time. If AT^SCCNT, parameter <mode>= 1 (Limit counter mode), then <action> type 3 immediately stops the pulse counter without indicating the "^SCCNT" URC. This action has the same effect as the command AT^SCCNT=0,0.

<pulse>(num)

Measurement result of the pulse counter in Start-Stop mode, indicated within the "^SSCNT" URC, if AT^SCCNT, parameter <action>=2 or 3. The value range of <pulse> is 32 bits (2^{32}-1).

0...4294967295	Number of pulses counted.

Note

- Measurement accuracy: In Start-Stop mode, you can achieve 100% accuracy if you take care that pulse transmission begins after the start command (AT^SSCNT=0 or 1) has returned OK and ends before the stop command (AT^SSCNT=3) is issued.

20.9.1 Using the Pulse Counter in Start-Stop Counter Mode

at^sccnt=1,0	Open pulse counter and enable Start-Stop counter mode.
OK	
at^sscnt=0	Reset and start pulse counter from 0.
OK	
at^sscnt=2	Request value.
OK	
^SSCNT: 0000003254	"^SSCNT" URC indicates number of pulses counted.
at^sscnt=2	Request value.
OK	
^SSCNT: 0000010024	"^SSCNT" URC indicates number of pulses counted.
at^sscnt=2	Request value.
OK	
^SSCNT: 0000015134	"^SSCNT" URC indicates number of pulses counted.
at^sscnt=3	Request value and stop pulse counter.
OK	
^SSCNT: 0000021020	"^SSCNT" URC indicates number of pulses counted until this time.
at^sscnt=2	Request value.
OK	
^SSCNT: 0000021020	"^SSCNT" URC still indicates the count of the last run.
at^sscnt=1	Restart pulse counter at the value of the last run.
OK	
at^sscnt=2	Request value.
^SSCNT: 0000022123	"^SSCNT" URC indicates number of pulses incremented from the last run.

21. Java related Commands

This chapter describes the AT commands related to Java applications processed by the TC65i.

21.1 AT^SJRA Run Java Application

The AT^SJRA write command launches the Java application.

Syntax

Test Command

AT^SJRA=?

Response(s)

("IMlet path")

Write Command

AT^SJRA=<appName>

Response(s)

^SJRA:
OK

If not successful:

ERROR
+CME ERROR: <err>

PIN	ASC0	ASC1	USB	MUX1	MUX2	MUX3	Charge	✈	Last
-	+	+	+	+	+	+	-	+	-

Parameter Description

<appName>(str)

Path of the Java application

The application name must be given as a fully qualified pathname (a:/.../...) to the jar/jad file containing the desired application.
The local flash file system is identified by: A:. Directory separator is "/" (002Fh).
Example: *A:/java/jam/example/helloworld/helloworld.jar*

Notes

- As an alternative, the Java application can be enabled to start up automatically whenever TC65i is getting started. Use the AT^SCFG command to make all the settings need for the Java autostart mode.
- When the Java application starts, all current calls will be terminated.

21.2 AT^SJNET Set Dialup Network Access Parameters

The AT^SJNET write command allows to create a profile which contains all parameters needed for automated network access through a dialup connection.

Syntax

Test Command

AT^SJNET=?

Response(s)

^SJNET:("csd"|"gprs"), ("Tel. num."|"access point name"), ("login"), ("password"), ("dns"), (list of supported <timeout>s)
OK

Read Command

AT^SJNET?

Response(s)

^SJNET: <bearer service>, <entry point>, <login>, <password>, <dns>, <timeout>
OK
ERROR
+CME ERROR: <err>

Write Command

AT^SJNET=<bearer service>, <entry point>, <login>, <password>[, <dns>][, <timeout>]

Response(s)

^SJNET: <bearer service>, <entry point>, <login>, <password>, <dns>, <timeout>
OK
ERROR
+CME ERROR: <err>

PIN	ASC0	ASC1	USB	MUX1	MUX2	MUX3	Charge	✈	Last
-	+	+	+	+	+	+	-	+	-

Parameter Description

<bearer service>(str)(+CSCS)	
“none“(P)	No bearer specified
“csd“	Dialup access uses Circuit Switched Data connection
“gprs“	Dialup access via GPRS

<entry point>(str)(+CSCS)	
““(P)	The content of parameter <entry point> depends on <bearer service>. The parameter is global for all interfaces, volatile and will not be reset by AT&F. • If <bearer service> is "csd", then parameter specifies the dialup phone number. The phone number can be modified to select between ISDN and anlaog call and to choose a bitrate. See also examples below. - The first character added to the phone number selects the mode: i = ISDN call, a = analog call (default). If omitted the default setting "analog" applies. - The last character appended to the phone number determines the bitrate. If omitted the default setting "9600 bps" applies. h = 14400 bps m = 9600 bps (default) l = 4800 bps s = 2400 bps • If <bearer service> is "gprs", then parameter specifies the GPRS access point name.

<login>(str)(+CSCS)	
““(P)	Specifies the login name for access to the dialup network. The login name consists of maximal 31 characters. Parameter is global for all interfaces, volatile and will not be reset by AT&F.

<password>(str)(+CSCS)	
““(P)	Specifies the password for access to the dialup network. Parameter is global for all interfaces, volatile and will not be reset by AT&F.

<dns>(str)(+CSCS)	
““(P)	Specifies the Primary DNS server (Nameserver) for the dialup network. The server address has to be specified in dotted IP address format (e.g. 145.146.147.148). If the parameter is omitted, the DNS assigned by the network is used. It is recommended to set manual DNS server addresses rather than using automatic DNS assignment. This avoids problems in case the network is unable to properlyhandle the automatic DNS service. Parameter is global for all interfaces, volatile and will not be reset by AT&F.

<timeout>(num)	
Idle Timeout in seconds	
0(P)...[30]...21600	Specifies the Java network idle timeout, which is the number of seconds to wait before the network connection is terminated automatically when no data transfer or other network activities take place. The value 0 means no timeout at all (you have to terminate a Circuit Switched Data connection using ATH and a

GPRS connection using AT+CGATT=0).
We recommend to use values greater than 10 seconds because otherwise you may get unintentional timeouts for slow network connections.
Parameter is global for all interfaces, volatile and will not be reset by AT&F.

Note

- The authentication mode for CSD and GPRS is always PAP.

Examples

EXAMPLE 1

This example illustrates how to configure a profile for circuit switched network access: The dialup phone number is +49800654321, user name is "user1", password is "dialup123", and the primary DNS has IP address "145.146.147.148". The phone number does not contain additional characters, therefore the destination is an analog device (default) and the bitrate is 9600 bps (default).

```
AT^SJNET="CSD", "+49800654321", "user1", "dialup123", "145.146.147.148"
^SJNET: "csd","+49800654321","user1","dialup123","145.146.147.148",30
OK
```

EXAMPLE 2

Same example as above, but the phone number contains additional characters for ISDN and 14400bps.

```
AT^SJNET="CSD", "i+49800654321h", "user1", "dialup123", "145.146.147.148"
^SJNET: "csd","i+49800654321h","user1","dialup123","145.146.147.148",30
OK
```

21.3 AT^SJOTAP Over The Air Application Provisioning

The AT^SJOTAP command serves to control and start OTAP operations for installing and updating Java applications over the air. Detailed explanations can be found in [3].
The AT^SJOTAP write command sets the password and all parameters required to install / delete a Java Application.
The AT^SJOTAP execute command starts the OTAP install process.

Syntax

Test Command

```
AT^SJOTAP=?
```

Response(s)

```
^SJOTAP:<SMS_pwd>, <Jad_URL>, <Appl_Dir>, <HTTP_User>, <HTTP_Pwd>, <BS>, <Dest>,
<Net_user>, <Net_pwd>, <DNS>, <NotifyURL>, <Ignore_Sms_PID>, <Hide_HTTP_auth_params>
OK
```

Read Command

```
AT^SJOTAP?
```

Response(s)

```
^SJOTAP: <SMS_pwd>, <Jad_URL>, <Appl_Dir>, <HTTP_User>, <HTTP_Pwd>, <BS>, <Dest>,
<Net_user>, <Net_pwd>, <DNS>, <NotifyURL>, <Ignore_Sms_PID>, <Hide_HTTP_auth_params>
OK
ERROR
+CME ERROR: <err>
```

Exec Command

```
AT^SJOTAP
```

Response(s)

```
OK
ERROR
+CME ERROR: <err>
```

Write Command

```
AT^SJOTAP=[<SMS_pwd>][, <Jad_URL>][, <Appl_Dir>][, <HTTP_User>][, <HTTP_Pwd>][, <BS>][,
<Dest>][, <Net_user>][, <Net_pwd>][, <DNS>][, <NotifyURL>][, <Ignore_Sms_PID>][,
<Hide_HTTP_auth_params>]
```

Response(s)

```
OK
ERROR
+CME ERROR: <err>
```

PIN	ASC0	ASC1	USB	MUX1	MUX2	MUX3	Charge	✈	Last
-	+	+	+	+	+	+	-	-	-

Parameter Description

<SMS_pwd>(str)

Password for OTAP SMS authentification

<Jad_URL>(str)

URL of update file

<Appl_Dir>(str)

Directory of Java application

Directory on the ME where a new application (JAD and JAR file) is installed. When entering the application directory with the AT^SJOTAP write command be sure that the path name is not terminated with a slash. For example, type "a:" or "a:/otap" rather than "a:/" or "a:/otap/".

<HTTP_User>(str)

HTTP user name

<HTTP_Pwd>(str)

HTTP password

<BS>(str)

Bearer Service

“csd“	Use Bearer service "Circuit Switched".
“gprs“	Use Bearer service "GPRS".

<Dest>(str)

Destination

Phone number if <BS>="csd" or Access point name (APN)if <BS>="gprs".
The phone number can be modified to select between ISDN or analog and to choose the bitrate. The format of the phone number and the default settings are the same as in the case of AT^SJNET (see parameter <entry point> for instructions). Please note that if no additional characters are used to modify the phone number then the default settings a = analog call and m = 9600 bps are assumed.

<Net_user>(str)

User name for accessing the network

<Net_pwd>(str)

Password for accessing the network

<DNS>(str)

Domain Name Server

<NotifyURL>(str)

URL to which result codes are posted

<Ignore_Sms_PID>(str)

Ignore SMS PID

“on“	Set ignore SMS PID "on".
“off“	Set ignore SMS PID "off".

<Hide_HTTP_auth_params>(str)

Hide HTTP authentication parameters

“on“	Set hide HTTP authentication parameters "on".
“off“	Set hide HTTP authentication parameters "off".

Notes

- The authentication mode for CSD and GPRS is always PAP.
- All parameters which are left out in the write command (except <Ignore_Sms_PID> and <Hide_HTTP_auth_params>) are set to "not configured", while parameters which are entered as "" will be stored as an empty string.
- Parameters <Ignore_Sms_PID> and <Hide_HTTP_auth_params> which are entered as "" will be stored as "off".
- Parameters that have not been configured via AT command, can be configured via SMS (see [3]).
- Parameters that have been configured via AT command cannot be reconfigured / overwritten via SMS.
- If the execute command ends up with an error, one or more mandatory parameters have not been specified (see [3]).

21.4 AT^SJSEC Write Binary Java Security Data

To configure the Java security environment special Java security commands and a mobile-specific security certificate must be transferred to the module in binary format. This is done with the help of AT^SJSEC. The AT^SJSEC execute command activates the binary data mode which allows to send binary data from the host application to the ME. The AT^SJSEC read command requests the current status of the Java security environment.

A detailed description of how to create the binary files and configure the Java security environment can be found in [3].

Syntax

Read Command

AT^SJSEC?

Response(s)

^SJSEC:<mode>, <HTTPS state>, <OBEX state>, <untrusted domain>[, <Certificate content>]
OK

Exec Command

AT^SJSEC

Response(s)

CONNECT

JSEC READY: SEND COMMAND ...
(Indicates that the ME entered the binary data mode. The host application can start to send the binary data.)
OK

PIN	ASC0	ASC1	USB	MUX1	MUX2	MUX3	Charge	✈	Last
-	+	+	+	+	+	+	-	+	+

Parameter Description

<mode>(num)	
Java security mode	
0(D)	Unsecured mode, i.e. security mode not active.
1	Secured mode, i.e. security mode active.

<HTTPS state>(num)	
0(D)	HTTPS connection or Secure Connection is possible if the server certificate (or the certificate chain) is valid.
1	HTTPS connection or Secure Connection is possible only if the server certificate is signed by the customer (owner of the root certificate in device).

<OBEX state>(num)	
0	Start of Module Exchange Suite is not permitted.
1(D)	Start of Module Exchange Suite is permitted.

<untrusted domain>(num)	
0(D)	Untrusted domain does not exist, MIDlets must be signed.
1	Untrusted domain exists, MIDlets have limited rights of access to the Java API.

`<Certificate content>`(str)

Some information of the root certificate is listed:
Issuer:
Serial number:
Subject:
Signature algorithm:
Thumbprint algorithm:
Thumbprint:

22. Miscellaneous Commands

The AT Commands described in this chapter are related to various areas.

22.1 A/ Repeat previous command line

Syntax

Exec Command
A/
Response(s)

PIN	ASC0	ASC1	USB	MUX1	MUX2	MUX3	Charge	✈	Last
-	+	+	+	+	+	+	-	+	-

Reference(s)
V.250

Command Description

Repeat previous command line.

Notes

- Line does not need to end with terminating character.
- After beginning with the character "a" or "A" a second character "t", "T" or "/" has to follow. In case of using a wrong second character, it is necessary to start again with character "a" or "A".
- If autobauding is active, the command A/ cannot be used (see AT+IPR).

22.2 ATS3 Set command line termination character

The ATS3 command determines the character recognized by the TA to terminate an incoming command line. It is also generated for result codes and information text, along with the ATS4 parameter.

Syntax

Read Command

```
ATS3?
```

Response(s)

```
<n>
OK
```

Write Command

```
ATS3=<n>
```

Response(s)

```
OK
ERROR
```

PIN	ASC0	ASC1	USB	MUX1	MUX2	MUX3	Charge	✈	Last
-	+	+	+	+	+	+	-	+	-

Reference(s)

V.250

Parameter Description

<n>(num)(&W)(&V)

command line termination character

000...13(&F)...127

Notes

- Using a value other than the default 13 may cause problems when entering commands.
- Whenever you change the setting take into account that the new value has no effect on the URC "^SHUTDOWN".

22.3 ATS4 Set response formatting character

The ATS4 command determines the character generated by the TA for result code and information text, along with the ATS3 parameter .

Syntax

Read Command

ATS4?

Response(s)

<n>
OK

Write Command

ATS4=<n>

Response(s)

OK
ERROR

PIN	ASC0	ASC1	USB	MUX1	MUX2	MUX3	Charge	✈	Last
-	+	+	+	+	+	+	-	+	-

Reference(s)

V.250

Parameter Description

<n>(num)(&W)(&V)

response formatting character

000...10(&F)...127

Note

- Whenever you change the setting take into account that the new value has no effect on the URC "^SHUTDOWN".

22.4 ATS5 Write command line editing character

Syntax

Read Command
ATS5?
Response(s)
<n> OK

Write Command
ATS5=<n>
Response(s)
OK

PIN	ASC0	ASC1	USB	MUX1	MUX2	MUX3	Charge	✈	Last
-	+	+	+	+	-	-	-	+	-

Reference(s)
V.250

Command Description

This parameter setting determines the character recognized by TA as a request to delete the immediately preceding character from the command line.

Parameter Description

<n>(num)(&W)(&V)
command line editing character 000...8(&F)...127

22.5 AT^SFDL Enter Firmware Download Mode

The AT^SFDL command allows the application manufacturer to download TC65i firmware into the module by starting the download process from a customer-designed update tool.

For this purpose, the TC65i firmware update file must be available in *.USF format. The *.USF file is part of each module specific firmware package supplied by Cinterion Wireless Modules GmbH. The firmware file consists of records to be transferred one by one from the update tool to the module.

The command supports two different update solutions:

- The AT^SFDL execute command is intended for *local firmware update procedures*:
  For this solution the *.USF file can be stored on a memory provided by the application, e.g. on a computer the module is connected to.
  The AT^SFDL execute command causes the module to reset and enter the firmware download mode (this may take some milliseconds). After entering the download mode the module sends the start pattern HEX 0x01 ("ANSWER_OK") to the update tool to indicate its ready state. Next, the update tool shall start to send the records of the firmware file. Each record received on the module is acknowledged to the update tool. Once all records are successfully received, the module shuts down automatically.
  Details on technical requirements and steps to develop an update tool can be found in "Application Note 16: Updating TC65i Firmware" [11].
- The write command AT^SFDL=<mode> is intended for *over-the-air firmware update procedures (FOTA)*:
  After input of AT^SFDL=1 the module enters a special firmware download mode that enables access to the SPI and expects that the *.USF file is available on an SPI flash connected to the module.
  This solution offers application manufacturers the option to implement FOTA procedures. In such case, the *.USF file can be put on an external FTP/HTTP server to be downloaded to the SPI by using circuit or packet switched connections.
  Details on technical requirements and steps to develop an update tool can be found in "Application Note 17: Over-The-Air Firmware Update" [12].

If the module is switched on although it has no valid firmware installed, it waits 60s for the AT^SFDL command (or for another download method to be started). If neither the AT^SFDL command nor equivalent characters from another download method are received the module switches off after a 60s timeout.

If a valid firmware is still installed, but the AT^SFDL command is issued without sending any firmware afterwards the module will stay in ready state. In this case it must be switched off.

Syntax

Test Command

```
AT^SFDL=?
```

Response(s)

```
^SFDL:(list of supported <mode>s)
OK
```

Exec Command

```
AT^SFDL
```

Response(s)

```
OK
0x01
```

Write Command

```
AT^SFDL=<mode>
```

Response(s)

```
OK
ERROR
+CME ERROR: <err>
```

PIN	ASC0	ASC1	USB	MUX1	MUX2	MUX3	Charge	✈	Last
-	+	+	+	-	-	-	-	+	+

Parameter Description

<mode>(num)	
1	Launches SPI firmware update mode to replace the module's existing firmware with a new firmware provided on a dedicated SPI flash. This mode is intended for FOTA (over-the-air firmware update) scenarios.

23. Appendix

23.1 Restricted access to SIM data after SIM PIN authentication

Users should be aware that when using a phonebook, SMS or Remote SAT command quickly after SIM PIN authentication the SIM data may not yet be accessible, resulting in a short delay before the requested AT command response is returned. This delay is due to the initial process of loading SIM data once after SIM PIN authentication. The duration of loading SIM data is dependent on the SIM card used and may take a couple of seconds.

The "^SSIM READY" URC enabled with AT^SSET can be used to notify the user when the ME has finished reading the SIM card and SIM data are accessible after SIM PIN authentication. Of course, all phonebook and SMS commands may be issued before the URC is delivered. In this case the AT command response (for example the complete phonebook) will appear after the delay mentioned above, but before the "^SSIM READY" URC is displayed. See example below.

In addition to or as an alternative to the "^SSIM READY" URC you can activate the "SIND: simstatus" URC provided by AT^SIND.

After the "+CREG: 1" (or "+CREG: 5") URC and before the "^SSIM READY" URC it is not sure that outgoing and incoming calls can be made and short message functions executed. Emergency calls are possible. Outgoing and incoming calls are always possible AFTER having received the "+CREG: 1" (or "+CREG: 5") and "^SSIM READY" URCs. See also Section 8.4, Network registration.

If SIM cards with EF_{OPL} and EF_{PNN} fields are inserted, it is possible that the initial process of reading EONS data causes an additional delay of 2 seconds (without Remote SIM Access) or approx. 10 seconds (if Remote SIM Access is activated) before the SIM is fully accessible. Therefore, trying to access the SIM during this time may cause the CME Error 14 or CMS Error 315 ("SIM busy") to occur even though the "^SSIM READY" URC was already output. For details please see the note appended to AT^SIND, "eons" indicator.

Example:

AT^SSET=1	Activate the "^SSIM READY" URC.
OK	
AT&W	Store the presentation mode of the "^SSIM READY" URC to the user profile.
OK	
AT+CFUN=1,1	Restart the ME.
OK	
^SYSSTART	The ME was restarted.
AT+CPIN	Enter the SIM PIN.
OK	
AT+CPBW=50,"+4030123456789",145,"Paul"	Write a new phonebook record.
OK	
^SSIM READY	The URC now confirms that the ME has finished reading data from the SIM.
AT+CPBR=50,50	Read the phonebook entered before.
+CPBR: 50,"+4030123456789",145,"Paul"	The phonebook entry was properly saved.

23.2 Star-Hash (*#) Network Commands

The following command strings can be sent to the network via ATD and have to be terminated with a semicolon. The command strings are defined with GSM 2.30 [20].

Table 23.1: Star-Hash (*#) Command Overview

Star-Hash Code	Functionality	Response, also refer to Table 23.3
Phone Security		
*#06#	Query IMEI	<IMEI> OK
**04[2]*oldPin[2]*newPin[2]*new-Pin[2]#	Change SIM pwd	+CME ERROR: <err> / OK
**05[2]*unblKey[2]*newPin[2]*new-Pin[2]#	Change/Unblocking SIM pwd	+CME ERROR: <err> / OK
*#0003*MasterPhoneCode#	Unlock "PS" lock with Master Phone Code	+CME ERROR: <err> / OK
[*]03[ZZ]*oldPw*newPw*newPw#	Registration of net password	+CME ERROR: <err> / OK
Phone number presentation		
*#30#	Check status of CLIP (Calling Line Identification Presentation)	+CLIP : <n>,<m> OK (see AT+CLIP)
*#31#	Check status of CLIR (Calling Line Identification Restriction)	+CLIR : <n>,<m> OK (see AT+CLIR)
*31#<Phonenumber>[;]	Suppress CLIR	(see AT+CLIR)
#31#<Phonenumber>[;]	Activate CLIR	(see AT+CLIR)
*#76#	Check status of COLP (Connected Line Identification Presentation)	+COLP : <n>,<m> OK (see: AT+COLP)
*#77#	Check status of COLR (Connected Line Identification Restriction)	+COLR : 0,<m> OK (where <m> = active or not active)
Call forwarding		
(choice of *,#,*#,**,##)21*DN*BS#	Act/deact/int/reg/eras CFU	^SCCFC : <reason>, <status>, <class> [,...] like +CCFC *) (see: AT+CCFC)
(choice of *,#,*#,**,##)67*DN*BS#	Act/deact/int/reg/eras CF busy	see above
(choice of *,#,*#,**,##)61*DN*BS*T#	Act/deact/int/reg/eras CF no reply	see above
(choice of *,#,*#,**,##)62*DN*BS#	Act/deact/int/reg/eras CF no reach	see above
(choice of *,#,*#,**,##)002*DN*BS*T#	Act/deact/int/reg/eras CF all	see above
(choice of *,#,*#,**,##)004*DN*BS*T#	Act/deact/int/reg/eras CF all cond.	see above
Call waiting		
(choice of *,#,*#)43*BS#	Activation/deactivation/int WAIT	+CCWA : <status>, <class> [,...] like +CCWA *) (see: AT+CCWA)

Star-Hash Code	Functionality	Response, also refer to Table 23.3
Call barring		
(choice of *,#,*#)33*Pw*BS#	Act/deact/int BAOC	^SCLCK : <fac>, <status>, <class> [, ...] like +CLCK *) (Refer to AT+CLCK)
(choice of *,#,*#)331*Pw*BS#	Act/deact/int BAOIC	see above
(choice of *,#,*#)332*Pw*BS#	Act/deact/int BAOIC exc.home	see above
(choice of *,#,*#)35*Pw*BS#	Act/deact/int. BAIC	see above
(choice of *,#,*#)351*Pw*BS#	Act/deact/int BAIC roaming	see above
#330*Pw*BS#	Deact. All Barring Services	see above
#333*Pw*BS#	Deact. All Outg.Barring Services	see above
#353*Pw*BS#	Deact. All Inc.Barring Services	see above
Call Hold / Multiparty		
C[C] in call	Call hold and multiparty	+CME ERROR: <err> / OK
USSD messages		
[C]...[C]#	Send USSD message	+CME ERROR: <err> / OK
C[C] (excluded 1[C])	Send USSD message	+CME ERROR: <err> / OK

*) Notes on ^SCCFC, +CCWA, ^SCLCK: The output depends on the affected basic service of the Star-Hash code. One line will be output for every tele- or bearer service coded in basic service code BS.
^SCCFC and ^SCLCK are modified by giving an additional <reason> or <fac> in front of the regular output string generated by the standard commands +CCFC and +CLCK.

Table 23.2: Abbreviations of Codes and Parameters used in Table 23.1

Abbreviation	Meaning	Value
ZZ	Type of supplementary services: Barring services All services	 330 Not specified
DN	Dialing number	String of digits 0-9
BS	Basic service equivalent to parameter class: Voice FAX SMS SMS+FAX Data circuit asynchron Data circuit synchron dedicated PAD access dedicated Packet access Data circuit asynchron+PAD Data circuit synchron+Packet Data circuit asynchron+synchron+Packet+PAD All Services	 11 13 16 12 25 24 27 26 21 22 20 --
T	Time in seconds	In contrast to AT+CCFC, parameter T has no default value. If T is not specified, an operator defined default or the last known value may be used, depending on the network operator.

Abbreviation	Meaning	Value
PW	Password	--
C	Character of TE character set (e.g. asterisk, hash or digit in case of USSD, or digits in case of held calls or multiparty calls)	--

Table 23.3: Star-Hash Command Response Parameters

Parameter	Meaning
<m>	Mode: 0 = not active, 1 = active
<n>	Unsolicited result code: 0 = presentation disabled, 1 = presentation enabled
<status>	Status: 0 = not active, 1 = active
<class>	Represents BS = basic service, refer to AT+CCFC, AT+CLCK
<fac>	Facility lock, refer to AT+CLCK
<reason>	Call forwarding reason

For exact specification of format and parameters for Star-Hash commands refer to GSM 02.04, Table 3.2 [19] and GSM 02.30, Annex C [20].

Table 23.4: Star-Hash Commands for Supplementary Services

Star-Hash Code	Abbreviations in Table 23.1	Functionality
*	act	Activate (except for CLIR, see list above)
**	reg	Register and activate
*#	int	Check status (interrogate)
#	deact	Deactivate (except for CLIR, see list above)
##	eras	Unregister and deactivate

23.3 Available AT Commands and Dependency on SIM PIN

ø ... Command not available
- ... Command does not require PIN1
+ ... Command requires PIN1
± ... Command sometimes requires PIN1

Table 23.5: Available AT Commands and Dependency on SIM PIN

AT Command	Exec	Test	Read	Write
Configuration Commands				
AT&F	-	ø	ø	ø
AT&V	-	ø	ø	ø
AT&W	-	ø	ø	ø
ATQ	-	ø	ø	ø
ATV	-	ø	ø	ø
ATX	-	ø	ø	ø
AT\V	-	ø	ø	ø
ATZ	-	ø	ø	ø
AT+CFUN	ø	-	-	-
AT^SMSO	-	-	ø	ø
AT+GCAP	-	-	ø	ø
AT+CMEE	ø	-	-	-
AT+CSCS	ø	-	-	-
AT^SCFG	ø	-	-	-
AT^SM20	ø	-	-	-
Status Control Commands				
AT+CMER	ø	-	-	-
AT+CIND	ø	-	-	-
AT^SIND	ø	-	-	-
AT+CEER	+	+	ø	ø
ATS18	ø	ø	-	-
AT+CPAS	-	-	ø	ø
AT+WS46	ø	-	-	-
Serial Interface Control Commands				
ATE	-	ø	ø	ø
AT&C	-	ø	ø	ø
AT&D	-	ø	ø	ø
AT&S	-	ø	ø	ø
AT\Q	-	ø	ø	ø
AT+IFC	ø	-	-	-
AT+ICF	ø	-	-	-

AT Command	Exec	Test	Read	Write
AT+ILRR	Ø	+	+	+
AT+IPR	Ø	-	-	-
AT+CMUX	Ø	-	-	-
AT^STPB	Ø	-	-	-
Security Commands				
AT+CPIN	Ø	-	-	-
AT+CPIN2	Ø	+	+	+
AT^SPIC	-	-	-	-
AT+CLCK	Ø	+	Ø	+
AT^SLCK	Ø	+	Ø	+
AT+CPWD	Ø	+	Ø	+
AT^SPWD	Ø	±	Ø	±
AT^SCSL	Ø	-	Ø	-
Identification Commands				
ATI	-	Ø	Ø	Ø
AT+CGMI	-	-	Ø	Ø
AT+GMI	-	-	Ø	Ø
AT+CGMM	-	-	Ø	Ø
AT+GMM	-	-	Ø	Ø
AT+CGMR	-	-	Ø	Ø
AT+GMR	-	-	Ø	Ø
AT+CGSN	-	-	Ø	Ø
AT+GSN	-	-	Ø	Ø
AT+CIMI	+	+	Ø	Ø
Call related Commands				
ATA	+	Ø	Ø	Ø
ATD	±	Ø	Ø	Ø
ATD><mem><n>	+	Ø	Ø	Ø
ATD><n>	+	Ø	Ø	Ø
ATD><str>	+	Ø	Ø	Ø
ATDI	+	Ø	Ø	Ø
ATDL	+	Ø	Ø	Ø
ATH	-	Ø	Ø	Ø
AT+CHUP	+	+	Ø	Ø
AT^SHUP	Ø	+	Ø	+
ATS0	Ø	Ø	-	+
ATS2	Ø	Ø	-	-
ATS6	Ø	Ø	-	-
ATS7	Ø	Ø	-	-
ATS8	Ø	Ø	-	-

AT Command	Exec	Test	Read	Write
ATS10	Ø	Ø	-	-
ATO	-	Ø	Ø	Ø
+++	-	Ø	Ø	Ø
AT+CBST	Ø	-	-	-
AT+CRLP	Ø	-	-	-
AT+CLCC	+	+	Ø	Ø
AT^SLCC	+	+	+	+
AT+CR	Ø	+	+	+
AT+CRC	Ø	-	-	-
AT+CSNS	Ø	-	-	-
AT^SCNI	+	+	Ø	Ø
AT^SLCD	+	+	Ø	Ø
AT^STCD	+	+	Ø	Ø
ATP	-	Ø	Ø	Ø
ATT	-	Ø	Ø	Ø
Network Service Commands				
AT+COPN	+	+	Ø	Ø
AT+COPS	Ø	-	±	±
AT^SOPS	Ø	+	Ø	Ø
AT+CREG	Ø	-	-	-
AT+CSQ	-	-	Ø	Ø
AT^SMONC	+	+	Ø	Ø
AT^SMOND	+	+	Ø	Ø
AT^SFNUR	Ø	-	-	-
AT^MONI	-	-	Ø	-
AT^MONP	-	-	Ø	-
AT^SMONG	+	+	Ø	+
AT^SALS	Ø	+	+	+
AT^SHOM	+	+	Ø	Ø
AT^SPLM	+	+	+	+
AT+CPOL	Ø	+	+	+
Supplementary Service Commands				
AT+CACM	Ø	+	+	+
AT^SACM	+	+	Ø	+
AT+CAMM	Ø	+	+	+
AT+CAOC	+	+	+	+
AT+CCUG	Ø	+	+	+
AT+CCFC	Ø	+	Ø	+
AT+CCWA	Ø	+	+	+
AT+CHLD	Ø	+	Ø	+

AT Command	Exec	Test	Read	Write
AT+CLIP	Ø	-	+	-
AT+CLIR	Ø	+	+	+
AT+COLP	Ø	+	+	+
AT+CPUC	Ø	+	+	+
AT+CSSN	Ø	-	-	-
AT+CUSD	Ø	+	+	+
Internet Service Commands				
AT^SICS	Ø	-	-	-
AT^SICI	Ø	-	-	-
AT^SISS	Ø	-	-	-
AT^SISI	Ø	-	-	-
AT^SISO	Ø	-	-	+
AT^SISC	Ø	-	Ø	+
AT^SISR	Ø	-	Ø	+
AT^SISW	Ø	-	Ø	+
AT^SICO	Ø	+	+	+
AT^SICC	Ø	+	Ø	+
AT^SISX	Ø	+	Ø	+
AT^SISE	Ø	-	Ø	-
GPRS Commands				
AT+CGACT	Ø	+	+	+
AT+CGANS	Ø	+	Ø	+
AT+CGATT	Ø	+	+	+
AT+CGAUTO	Ø	+	+	+
AT+CGDATA	Ø	+	Ø	+
AT+CGDCONT	Ø	+	+	+
AT+CGEQMIN	Ø	+	+	+
AT+CGEQREQ	Ø	+	+	+
AT+CGPADDR	Ø	+	Ø	+
AT+CGQMIN	Ø	+	+	+
AT+CGQREQ	Ø	+	+	+
AT+CGREG	Ø	+	+	+
AT+CGSMS	Ø	+	+	+
AT^SGACT	+	+	+	Ø
AT^SGAUTH	Ø	-	-	-
AT^SGCONF	Ø	-	-	-
ATA	+	Ø	Ø	Ø
ATD*99#	+	Ø	Ø	Ø
ATD*98#	+	Ø	Ø	Ø
ATH	+	Ø	Ø	Ø

AT Command	Exec	Test	Read	Write
ATS0	Ø	Ø	-	+
FAX Commands				
AT+FCLASS	Ø	-	-	-
AT+FRH	Ø	-	Ø	-
AT+FRM	Ø	-	Ø	-
AT+FRS	Ø	Ø	Ø	-
AT+FTH	Ø	-	Ø	-
AT+FTM	Ø	-	Ø	-
AT+FTS	Ø	Ø	Ø	-
Short Message Service (SMS) Commands				
AT+CMGC	Ø	+	Ø	+
AT+CMGD	Ø	+	Ø	+
AT+CMGF	Ø	-	-	-
AT+CMGL	+	+	Ø	+
AT+CMGR	Ø	+	Ø	+
AT+CMGS	Ø	+	Ø	+
AT+CMGW	+	+	Ø	+
AT+CMSS	Ø	+	Ø	+
AT+CNMA	+	+	Ø	+
AT+CNMI	Ø	+	+	+
AT+CPMS	Ø	+	+	+
AT+CSCA	Ø	+	+	+
AT+CSCB	Ø	+	+	+
AT+CSDH	Ø	+	+	+
AT+CSMP	Ø	+	+	+
AT+CSMS	Ø	+	+	+
AT^SCML	+	+	Ø	+
AT^SCMR	Ø	+	Ø	+
AT^SCMS	Ø	+	Ø	+
AT^SCMW	Ø	+	Ø	+
AT^SLMS	+	+	Ø	Ø
AT^SMGL	+	+	Ø	+
AT^SMGO	Ø	+	+	+
AT^SMGR	Ø	+	Ø	+
AT^SSCONF	Ø	-	-	-
AT^SSDA	Ø	-	-	-
AT^SSMSS	Ø	+	+	+
SIM related Commands				
AT+CRSM	Ø	±	Ø	±
AT+CSIM	Ø	-	Ø	-

AT Command	Exec	Test	Read	Write
AT^SATR	-	-	ø	ø
AT^SXSM	ø	+	ø	+
AT^SCKS	ø	-	-	-
AT^SSET	ø	-	-	-
AT^SCID	-	-	ø	ø
AT+CXXCID	-	-	ø	ø
Remote SIM Access (RSA) Commands				
AT^SRSA	ø	-	-	-
AT^SRSM	ø	-	ø	-
SIM Application Toolkit (SAT) Commands				
AT^SSTA	ø	-	-	-
^SSTN	ø	ø	ø	ø
AT^SSTGI	ø	-	-	-
AT^SSTR	ø	-	-	-
Phonebook Commands				
AT+CNUM	+	+	ø	ø
AT+CPBR	ø	+	ø	+
AT+CPBS	ø	+	+	+
AT+CPBW	ø	+	ø	+
AT^SPBW	ø	+	ø	+
AT^SDLD	+	+	ø	ø
AT^SPBC	ø	+	ø	+
AT^SPBD	ø	+	ø	+
AT^SPBG	ø	+	ø	+
AT^SPBS	ø	+	ø	+
Audio Commands				
ATL	-	ø	ø	ø
ATM	-	ø	ø	ø
AT+CLVL	ø	-	-	-
AT+CMUT	ø	-	-	-
AT+VTD	ø	-	-	-
AT+VTS	ø	-	ø	-
AT^SAIC	ø	-	-	-
AT^SNFA	ø	-	-	-
AT^SNFD	-	-	ø	ø
AT^SNFG	ø	-	ø	-
AT^SNFI	ø	-	-	-
AT^SNFM	ø	-	-	-
AT^SNFO	ø	-	-	-

AT Command	Exec	Test	Read	Write
AT^SNFPT	Ø	-	-	-
AT^SNFS	Ø	-	-	-
AT^SNFTTY	Ø	-	-	-
AT^SNFV	Ø	-	-	-
AT^SNFW	-	-	Ø	Ø
AT^SRTC	-	-	-	-
Hardware related Commands				
AT+CCLK	Ø	-	-	-
AT+CALA	Ø	-	-	-
AT^SBC	Ø	-	-	-
AT^SBV	-	-	Ø	Ø
AT^SCTM	Ø	-	-	-
AT^SSYNC	Ø	-	-	-
AT^SSPI	Ø	-	-	-
AT^SAADC	Ø	Ø	-	Ø
AT^SRADC	Ø	-	-	-
AT^SWDAC	Ø	-	-	-
GPIO Commands				
AT^SPIO	Ø	-	Ø	-
AT^SCPIN	Ø	-	Ø	-
AT^SCPOL	Ø	-	Ø	-
AT^SCPORT	Ø	-	Ø	-
AT^SDPORT	Ø	-	Ø	-
AT^SGIO	Ø	-	Ø	-
AT^SSIO	Ø	-	Ø	-
AT^SCCNT	Ø	-	-	-
AT^SSCNT	Ø	-	-	-
Java related Commands				
AT^SJRA	Ø	-	Ø	-
AT^SJNET	Ø	-	-	-
AT^SJOTAP	-	-	-	-
AT^SJSEC	-	Ø	-	Ø
Miscellaneous Commands				
A/	-	Ø	Ø	Ø
ATS3	Ø	Ø	-	-
ATS4	Ø	Ø	-	-
ATS5	Ø	Ø	-	-
AT^SFDL	-	-	Ø	-

23.4 Availability of AT Commands Depending on Operating Mode of ME

- ... AT command not supported
+ ... AT command supported
± ... AT command partially supported
See description of AT command for details.

Table 23.6: Availability of AT Commands Depending on Operating Mode of ME

AT Command	Normal Mode	✈	Charge
Configuration Commands			
AT&F	+	+	-
AT&V	+	+	-
AT&W	+	+	-
ATQ	+	+	-
ATV	+	+	-
ATX	+	+	-
AT\V	+	+	-
ATZ	+	+	-
AT+CFUN	+	+	-
AT^SMSO	+	+	-
AT+GCAP	+	+	-
AT+CMEE	+	+	-
AT+CSCS	+	+	-
AT^SCFG	+	±	±
AT^SM20	+	-	-
Status Control Commands			
AT+CMER	+	+	-
AT+CIND	+	+	-
AT^SIND	+	+	-
AT+CEER	+	+	-
ATS18	+	+	-
AT+CPAS	+	+	-
AT+WS46	+	+	-
Serial Interface Control Commands			
ATE	+	+	-
AT&C	+	+	-
AT&D	+	+	-
AT&S	+	+	-
AT\Q	+	+	-
AT+IFC	+	+	-
AT+ICF	+	+	-

AT Command	Normal Mode	✈	Charge
AT+ILRR	+	+	-
AT+IPR	+	+	-
AT+CMUX	+	+	-
AT^STPB	+	+	-
Security Commands			
AT+CPIN	+	+	-
AT+CPIN2	+	+	-
AT^SPIC	+	+	-
AT+CLCK	+	±	-
AT^SLCK	+	±	-
AT+CPWD	+	±	-
AT^SPWD	+	±	-
AT^SCSL	+	+	-
Identification Commands			
ATI	+	+	-
AT+CGMI	+	+	-
AT+GMI	+	+	-
AT+CGMM	+	+	-
AT+GMM	+	+	-
AT+CGMR	+	+	-
AT+GMR	+	+	-
AT+CGSN	+	+	-
AT+GSN	+	+	-
AT+CIMI	+	+	-
Call related Commands			
ATA	+	-	-
ATD	+	-	-
ATD><mem><n>	+	-	-
ATD><n>	+	-	-
ATD><str>	+	-	-
ATDI	+	-	-
ATDL	+	-	-
ATH	+	-	-
AT+CHUP	+	-	-
AT^SHUP	+	-	-
ATS0	+	-	-
ATS2	+	+	-
ATS6	+	+	-
ATS7	+	+	-

AT Command	Normal Mode	✈	Charge
ATS8	+	+	-
ATS10	+	+	-
ATO	+	-	-
+++	+	+	-
AT+CBST	+	+	-
AT+CRLP	+	+	-
AT+CLCC	+	-	-
AT^SLCC	+	-	-
AT+CR	+	+	-
AT+CRC	+	+	-
AT+CSNS	+	+	-
AT^SCNI	+	-	-
AT^SLCD	+	+	-
AT^STCD	+	+	-
ATP	+	-	-
ATT	+	-	-
Network Service Commands			
AT+COPN	+	+	-
AT+COPS	+	-	-
AT^SOPS	+	-	-
AT+CREG	+	-	-
AT+CSQ	+	-	-
AT^SMONC	+	-	-
AT^SMOND	+	-	-
AT^SFNUR	+	+	-
AT^MONI	+	-	-
AT^MONP	+	-	-
AT^SMONG	+	-	-
AT^SALS	+	-	-
AT^SHOM	+	-	-
AT^SPLM	+	+	-
AT+CPOL	+	+	-
Supplementary Service Commands			
AT+CACM	+	+	-
AT^SACM	+	+	-
AT+CAMM	+	+	-
AT+CAOC	+	+	-
AT+CCUG	+	+	-
AT+CCFC	+	-	-
AT+CCWA	+	-	-

AT Command	Normal Mode	✈	Charge
AT+CHLD	+	-	-
AT+CLIP	+	-	-
AT+CLIR	+	-	-
AT+COLP	+	-	-
AT+CPUC	+	+	-
AT+CSSN	+	-	-
AT+CUSD	+	-	-
Internet Service Commands			
AT^SICS	+	+	-
AT^SICI	+	+	-
AT^SISS	+	+	-
AT^SISI	+	+	-
AT^SISO	+	-	-
AT^SISC	+	-	-
AT^SISR	+	-	-
AT^SISW	+	-	-
AT^SICO	+	-	-
AT^SICC	+	-	-
AT^SISX	+	-	-
AT^SISE	+	-	-
GPRS Commands			
AT+CGACT	+	+	-
AT+CGANS	+	-	-
AT+CGATT	+	-	-
AT+CGAUTO	+	-	-
AT+CGDATA	+	-	-
AT+CGDCONT	+	+	-
AT+CGEQMIN	+	+	-
AT+CGEQREQ	+	+	-
AT+CGPADDR	+	+	-
AT+CGQMIN	+	+	-
AT+CGQREQ	+	+	-
AT+CGREG	+	+	-
AT+CGSMS	+	+	-
AT^SGACT	+	+	-
AT^SGAUTH	+	+	-
AT^SGCONF	+	+	-
ATA	+	-	-
ATD*99#	+	-	-
ATD*98#	+	-	-

AT Command	Normal Mode	✈	Charge
ATH	+	-	-
ATS0	+	-	-
FAX Commands			
AT+FCLASS	+	+	-
AT+FRH	+	-	-
AT+FRM	+	-	-
AT+FRS	+	-	-
AT+FTH	+	-	-
AT+FTM	+	-	-
AT+FTS	+	-	-
Short Message Service (SMS) Commands			
AT+CMGC	+	-	-
AT+CMGD	+	+	-
AT+CMGF	+	+	-
AT+CMGL	+	+	-
AT+CMGR	+	+	-
AT+CMGS	+	-	-
AT+CMGW	+	+	-
AT+CMSS	+	-	-
AT+CNMA	+	-	-
AT+CNMI	+	+	-
AT+CPMS	+	+	-
AT+CSCA	+	+	-
AT+CSCB	+	+	-
AT+CSDH	+	+	-
AT+CSMP	+	+	-
AT+CSMS	+	+	-
AT^SCML	+	+	-
AT^SCMR	+	+	-
AT^SCMS	+	-	-
AT^SCMW	+	+	-
AT^SLMS	+	+	-
AT^SMGL	+	+	-
AT^SMGO	+	+	-
AT^SMGR	+	+	-
AT^SSCONF	+	+	-
AT^SSDA	+	+	-
AT^SSMSS	+	+	-

AT Command	Normal Mode	✈	Charge
SIM related Commands			
AT+CRSM	+	+	-
AT+CSIM	+	+	-
AT^SATR	+	+	-
AT^SXSM	+	+	-
AT^SCKS	+	+	-
AT^SSET	+	+	-
AT^SCID	+	+	-
AT+CXXCID	+	+	-
Remote SIM Access (RSA) Commands			
AT^SRSA	+	-	-
AT^SRSM	+	-	-
SIM Application Toolkit (SAT) Commands			
AT^SSTA	+	+	-
^SSTN	+	+	-
AT^SSTGI	+	+	-
AT^SSTR	+	+	-
Phonebook Commands			
AT+CNUM	+	+	-
AT+CPBR	+	+	-
AT+CPBS	+	+	-
AT+CPBW	+	+	-
AT^SPBW	+	+	-
AT^SDLD	+	+	-
AT^SPBC	+	+	-
AT^SPBD	+	+	-
AT^SPBG	+	+	-
AT^SPBS	+	+	-
Audio Commands			
ATL	+	+	-
ATM	+	+	-
AT+CLVL	+	+	-
AT+CMUT	+	+	-
AT+VTD	+	-	-
AT+VTS	+	-	-
AT^SAIC	+	+	-
AT^SNFA	+	+	-
AT^SNFD	+	+	-

AT Command	Normal Mode	✈	Charge
AT^SNFG	+	+	-
AT^SNFI	+	+	-
AT^SNFM	+	+	-
AT^SNFO	+	+	-
AT^SNFPT	+	+	-
AT^SNFS	+	+	-
AT^SNFTTY	+	-	-
AT^SNFV	+	+	-
AT^SNFW	+	+	-
AT^SRTC	+	+	-
Hardware related Commands			
AT+CCLK	+	+	+
AT+CALA	+	+	+
AT^SBC	+	+	±
AT^SBV	+	+	-
AT^SCTM	+	+	+
AT^SSYNC	+	-	-
AT^SSPI	+	+	-
AT^SAADC	+	+	-
AT^SRADC	+	+	-
AT^SWDAC	+	+	-
GPIO Commands			
AT^SPIO	+	+	-
AT^SCPIN	+	+	-
AT^SCPOL	+	+	-
AT^SCPORT	+	+	-
AT^SDPORT	+	+	-
AT^SGIO	+	+	-
AT^SSIO	+	+	-
AT^SCCNT	+	+	-
AT^SSCNT	+	+	-
Java related Commands			
AT^SJRA	+	+	-
AT^SJNET	+	+	-
AT^SJOTAP	+	-	-
AT^SJSEC	+	+	-
Miscellaneous Commands			
A/	+	+	-
ATS3	+	+	-

AT Command	Normal Mode	✈	Charge
ATS4	+	+	-
ATS5	+	+	-
AT^SFDL	+	+	-

23.5 AT Command Settings storable with AT&W

Table 23.7: Settings Stored to User Profile on ASC0 / MUX Channel 1

AT Command	Stored Parameters
Configuration Commands	
ATQ	<n>
ATV	<value>
ATX	<value>
AT\V	<value>
AT+CMEE	<errMode>
Status Control Commands	
ATS18	<n>
Serial Interface Control Commands	
ATE	<value>
AT&C	<value>
AT&D	<value>
AT&S	<value>
AT\Q	<n>
AT+IFC	<TEflowcontrol>, <TAflowcontrol>
AT+ICF	<format>, <parity>
AT+ILRR	<value>
AT^STPB	<n>
Call related Commands	
ATS0	<n>
ATS6	<n>
ATS7	<n>
ATS8	<n>
ATS10	<n>
AT+CBST	<speed>, <name>, <ce>
AT+CRLP	<iws>, <mws>, <T1>, <N2>
AT^SLCC	<n>
AT+CR	<mode>
AT+CRC	<mode>
Network Service Commands	
AT+COPS	<format>
AT+CREG	<n>
Supplementary Service Commands	
AT^SACM	<n>

AT Command	Stored Parameters
AT+CLIP	<n>
GPRS Commands	
ATS0	<n>
FAX Commands	
AT+FCLASS	<n>
Short Message Service (SMS) Commands	
AT+CMGF	<mode>
AT+CNMI	<mode>, <mt>, <bm>, <ds>
AT+CSDH	<show>
AT+CSMS	<service>
AT^SMGO	<n>
SIM related Commands	
AT^SCKS	<mode>
AT^SSET	<n>
Miscellaneous Commands	
ATS3	<n>
ATS4	<n>
ATS5	<n>

Table 23.8: Settings Stored to User Profile on ASC1 / MUX Channels 2 and 3

AT Command	Stored Parameters
Configuration Commands	
ATQ	<n>
ATV	<value>
ATX	<value>
AT+CMEE	<errMode>
Serial Interface Control Commands	
ATE	<value>
AT&C	<value>
AT&D	<value>
AT&S	<value>
AT\Q	<n>
AT+IFC	<TEflowcontrol>, <TAflowcontrol>
AT+ICF	<format>, <parity>
AT^STPB	<n>

AT Command	Stored Parameters
Call related Commands	
ATS0	<n>
AT^SLCC	<n>
AT+CR	<mode>
AT+CRC	<mode>
Network Service Commands	
AT+COPS	<format>
AT+CREG	<n>
Supplementary Service Commands	
AT^SACM	<n>
AT+CLIP	<n>
GPRS Commands	
ATS0	<n>
Short Message Service (SMS) Commands	
AT+CMGF	<mode>
AT+CNMI	<mode>, <mt>, <bm>, <ds>
AT+CSDH	<show>
AT+CSMS	<service>
AT^SMGO	<n>
SIM related Commands	
AT^SCKS	<mode>
AT^SSET	<n>
Miscellaneous Commands	
ATS3	<n>
ATS4	<n>

23.6 Factory Default Settings Restorable with AT&F

Table 23.9: Factory Default Settings Restorable with AT&F

AT Command	Factory Defaults
Configuration Commands	
ATQ	<n>=0
ATV	<value>=1
ATX	<value>=4
AT\V	<value>=1
AT+CFUN	<fun>=1
AT+CMEE	<errMode>=0
AT+CSCS	<chset>="GSM"
AT^SM20	<CallMode>=1, <CmgwMode>=1
AT^SCFG	<tcpBufSize>="5200", <tcpIrt>="3", <tcpMr>="10", <tcpOt>="6000", <tcpWithUrc>="on"
Status Control Commands	
AT+CMER	<mode>=0, <keyp>=0, <disp>=0, <ind>=0, <bfr>=0
AT+CIND	<mode>=1
ATS18	<n>=0
Serial Interface Control Commands	
ATE	<value>=1
AT&C	<value>=1
AT&D	<value>=2
AT&S	<value>=0
AT\Q	<n>=0
AT+IFC	<TEflowcontrol>=0, <TAflowcontrol>=0
AT+ILRR	<value>=0
AT^STPB	<n>=0
Call related Commands	
ATS0	<n>=000
ATS6	<n>=000
ATS7	<n>=060
ATS8	<n>=0
ATS10	<n>=002
AT+CBST	<speed>=7, <name>=0, <ce>=1
AT+CRLP	<iws>=61, <mws>=61, <T1>=78, <N2>=6
AT^SLCC	<n>=0
AT+CR	<mode>=0
AT+CRC	<mode>=0

AT Command	Factory Defaults
Network Service Commands	
AT+COPS	<format>=0
AT+CREG	<n>=0
AT^SALS	<view>=0, <line>=1
Supplementary Service Commands	
AT^SACM	<n>=0
AT+CLIP	<n>=0
AT+CSSN	<n>=0, <m>=0
AT+CUSD	<n>=0
GPRS Commands	
AT+CGAUTO	<n>=3
AT+CGREG	<n>=0
AT+CGSMS	<service>=3
AT^SGAUTH	<auth>=1
ATS0	<n>=000
FAX Commands	
AT+FCLASS	<n>=0
Short Message Service (SMS) Commands	
AT+CMGF	<mode>=0
AT+CNMI	<mode>=0, <mt>=0, <bm>=0, <ds>=0, <bfr>=1
AT+CSCB	<mode>=0, <mids>=" ", <dcss>=" "
AT+CSDH	<show>=0
AT+CSMP	<fo>=17, <vp>=167, <dcs>=0, <pid>=0
AT+CSMS	<service>=0
AT^SMGO	<n>=0
AT^SSCONF	<ra>=0
AT^SSDA	<da>=0
AT^SSMSS	<seq>=0
SIM related Commands	
AT^SCKS	<mode>=0
AT^SSET	<n>=0
Phonebook Commands	
AT+CPBS	<storage>="SM"
AT^SPBS	<internal-counter>=0
Audio Commands	
AT+VTD	<duration>=1

AT Command	Factory Defaults
Hardware related Commands	
AT^SCTM	<n>=0, <p>=0
AT^SSPI	<connectionState>=0, <delayOne>=0, <delayTwo>=0
Miscellaneous Commands	
ATS3	<n>=013
ATS4	<n>=010
ATS5	<n>=008

23.7 Summary of Unsolicited Result Codes (URC)

Table 23.10: Summary of Unsolicited Result Codes (URC)

AT Command	URC
Configuration Commands	
AT+CFUN	^SYSSTART
AT+CFUN	^SYSSTART CHARGE ONLY MODE
AT^SMSO	^SHUTDOWN
AT^SCFG	^SCFG: "AutoExec", <AutoExecState>, <AutoExecType>, <AutoExecIndex>, <AutoExecMode>, <AutoExecATC>
AT^SCFG	^SYSSTART AIRPLANE MODE
Status Control Commands	
AT+CMER	+CIEV: <indDescr>, <indValue>$_1$[, <indValue>$_2$]
AT^SIND	+CIEV: <indDescr>, <indValue>
AT^SIND	+CIEV: <indDescr>, <adnEntry>, <adnNumber>, <adnType>, <adnText> +CIEV: <indDescr>, "READY"
AT^SIND	+CIEV: <indDescr>, <indValue>, <vmCounter>
AT^SIND	+CIEV: <indDescr>, <indValue>, <eonsOperator>, <servProvider>
AT^SIND	+CIEV: <indDescr>, <nitzUT>, <nitzTZ>, <nitzDST>
AT^SIND	+CIEV: <indDescr>, <indValue>, <lstaEdv>, <lstaRssi>
AT^SIND	+CIEV: <indDescr>, <indValue>, <lstaNo>, <lstaMax>, <lstaMin>, <lstaMean>, <lstaVar>
Call related Commands	

AT^SLCC	if the list of current calls is empty:
	^SLCC:
	if one or more calls are currently in the list:
	^SLCC: <idx>, <dir>, <stat>, <mode>, <mpty>, <traffic channel assigned>[, <number>, <type>[, <alpha>]]
	[^SLCC: <idx>, <dir>, <stat>, <mode>, <mpty>, <traffic channel assigned>[, <number>, <type>[, <alpha>]]]
	[...]
	^SLCC:

AT+CRC	RING
AT+CRC	+CRING: <type>
Network Service Commands	
AT+CREG	+CREG: <stat>
AT+CREG	+CREG: <stat>[, <lac>, <ci>]
AT^SALS	^SALS: <line>
Supplementary Service Commands	
AT^SACM	+CCCM: <ccm>
AT+CCWA	+CCWA: <calling number>, <type of number>, <class>, , <CLI validity>
AT+CCWA	^SCWA:
AT+CLIP	+CLIP: <number>, <type>[, , [, [<alpha>][, <CLI validity>]]]

AT Command	URC
AT+COLP	+COLP: <number>, <type>
AT+CSSN	+CSSI: <code 1>
AT+CSSN	+CSSU: <code 2>
AT+CUSD	+CUSD: <m>[, <str_urc>[, <dcs>]]
Internet Service Commands	
AT^SISR	^SISR: <srvProfileId>, <urcCauseId>
AT^SISW	^SISW: <srvProfileId>, <urcCauseId>
Internet Service URC "^SIS"	^SIS: <srvProfileId>, <urcCause>[, [<urcInfoId>][, <urcInfoText>]]
GPRS Commands	
AT+CGREG	+CGREG: <stat>
AT+CGREG	+CGREG: <stat>, <lac>, <ci>
Short Message Service (SMS) Commands	
AT+CNMI	+CMTI: <mem3>, <index>
AT+CNMI	+CMT: <length><CR><LF><pdu>
AT+CNMI	+CMT: <oa>, <scts>[, <tooa>, <fo>, <pid>, <dcs>, <sca>, <tosca>, <length>]<CR><LF><data>
AT+CNMI	+CBM: <length><CR><LF><pdu>
AT+CNMI	+CBM: <sn>, <mid>, <dcs>, <page>, <pages><CR><LF><data>
AT+CNMI	+CDS: <length><CR><LF><pdu>
AT+CNMI	+CDS: <fo>, <mr>[, <ra>][, <tora>], <scts>, <dt>, <st>
AT+CNMI	+CDSI: <mem3>, <index>
AT^SMGO	^SMGO: <mode>
SIM related Commands	
AT^SCKS	^SCKS: <SimStatus>
AT^SSET	^SSIM READY
Remote SIM Access (RSA) Commands	
AT^SRSA	^SRSA: <devId>, <sapRole>, <connState>
AT^SRSM	^SRSM: <RsaDevId>, <RsaMsgId>[, <RsaMsgData>[, <RsaMsgLen>[, <RsaMsgRc>]]]
SIM Application Toolkit (SAT) Commands	
^SSTN	^SSTN: <cmdType>
^SSTN	^SSTN: <cmdTerminateValue>
^SSTN	^SSTN: 254
^SSTN	^SSTN: 255
Hardware related Commands	
AT+CALA	+CALA: [<text>]
AT^SBC	^SBC: Undervoltage

AT Command	URC
AT^SBC	^SBC: Overvoltage warning
AT^SBC	^SBC: Overvoltage shutdown
AT^SCTM	^SCTM_A: <m>
AT^SCTM	^SCTM_B: <m>
AT^SRADC	^SRADC: <ch>, <count>, <value>[, <value>[, <value>[, <value>[, <value>[, <value>[, <value>[, <value>[, <value>]]]]]]]]
GPIO Commands	
AT^SCPOL	^SCPOL: <io_id>, <value>
AT^SCCNT	^SCCNT: <time>
AT^SSCNT	^SSCNT: <pulse>

23.8 AT Commands not usable for USB

Table 23.11: AT Commands not usable for USB

AT Command
Serial Interface Control Commands
AT\Q
AT+IFC
AT+ICF
AT+ILRR
AT+IPR
AT^STPB
Audio Commands
ATL
ATM

23.9 Alphabetical List of AT Commands

Table 23.12: Alphabetical List of AT Commands

AT Command	Description	Section and Page
+++	Switch from data mode or PPP online mode to command mode	Section 7.19, page 182
^SSTN	SAT Notification	Section 16.2, page 437
A/	Repeat previous command line	Section 22.1, page 545
AT&C	Set Data Carrier Detect (DCD) Line mode	Section 4.2, page 112
AT&D	Set Data Terminal Ready (DTR) line mode	Section 4.3, page 113
AT&F	Set all current parameters to manufacturer defaults	Section 2.1, page 32
AT&S	Set Data Set Ready (DSR) line mode	Section 4.4, page 114
AT&V	Display current configuration	Section 2.2, page 33
AT&W	Stores current configuration to user defined profile	Section 2.3, page 36
AT+CACM	Accumulated call meter (ACM) reset or query	Section 9.1, page 229
AT+CALA	Set alarm time	Section 19.2, page 493
AT+CAMM	Accumulated call meter maximum (ACMmax) set or query	Section 9.3, page 232
AT+CAOC	Advice of Charge information	Section 9.4, page 233
AT+CBST	Select bearer service type	Section 7.20, page 183
AT+CCFC	Call forwarding number and conditions control	Section 9.6, page 236
AT+CCLK	Real Time Clock	Section 19.1, page 492
AT+CCUG	Closed User Group	Section 9.5, page 234
AT+CCWA	Call Waiting	Section 9.7, page 240
AT+CEER	Extended Error Report	Section 3.4, page 98
AT+CFUN	Set phone functionality	Section 2.9, page 42
AT+CGACT	PDP context activate or deactivate	Section 11.1, page 316
AT+CGANS	Manual response to a network request for PDP context activation	Section 11.2, page 318
AT+CGATT	GPRS attach or detach	Section 11.3, page 320
AT+CGAUTO	Automatic response to a network request for PDP context activation	Section 11.4, page 321
AT+CGDATA	Enter data state	Section 11.5, page 323
AT+CGDCONT	Define PDP Context	Section 11.6, page 325
AT+CGEQMIN	Rel. 99 Quality of Service Profile (Minimum acceptable)	Section 11.7, page 327
AT+CGEQREQ	Rel. 99 Quality of Service Profile (Requested)	Section 11.8, page 331
AT+CGMI	Request manufacturer identification	Section 6.2, page 156
AT+CGMM	Request model identification	Section 6.4, page 157
AT+CGMR	Request revision identification of software status	Section 6.6, page 158
AT+CGPADDR	Show PDP address	Section 11.9, page 335
AT+CGQMIN	Quality of Service Profile (Minimum acceptable)	Section 11.10, page 336
AT+CGQREQ	Quality of Service Profile (Requested)	Section 11.11, page 340
AT+CGREG	GPRS Network Registration Status	Section 11.12, page 344
AT+CGSMS	Select service for MO SMS messages	Section 11.13, page 346
AT+CGSN	Request International Mobile Equipment Identity (IMEI)	Section 6.8, page 159

AT Command	Description	Section and Page
AT+CHLD	Call Hold and Multiparty	Section 9.8, page 244
AT+CHUP	Hang up call	Section 7.10, page 172
AT+CIMI	Request International Mobile Subscriber Identity (IMSI)	Section 6.10, page 160
AT+CIND	Indicator control	Section 3.2, page 86
AT+CLCC	List of current calls	Section 7.22, page 186
AT+CLCK	Facility lock	Section 5.4, page 139
AT+CLIP	Calling Line Identification Presentation	Section 9.9, page 246
AT+CLIR	Calling Line Identification Restriction	Section 9.10, page 248
AT+CLVL	Loudspeaker volume level	Section 18.4, page 466
AT+CMEE	Mobile Equipment Error Message Format	Section 2.12, page 48
AT+CMER	Mobile Equipment Event Reporting	Section 3.1, page 84
AT+CMGC	Send an SMS command	Section 13.2, page 372
AT+CMGD	Delete short message	Section 13.3, page 373
AT+CMGF	Select SMS message format	Section 13.4, page 374
AT+CMGL	List SMS messages from preferred store	Section 13.5, page 375
AT+CMGR	Read SMS messages	Section 13.6, page 377
AT+CMGS	Send Short Message	Section 13.7, page 379
AT+CMGW	Write Short Messages to Memory	Section 13.8, page 381
AT+CMSS	Send short messages from storage	Section 13.9, page 383
AT+CMUT	Mute control	Section 18.5, page 467
AT+CMUX	Multiplex Mode	Section 4.10, page 125
AT+CNMA	New Message Acknowledgement to ME/TE, only phase 2+	Section 13.10, page 384
AT+CNMI	New short Message Indication	Section 13.11, page 385
AT+CNUM	Read own numbers	Section 17.2, page 442
AT+COLP	Connected Line Identification Presentation	Section 9.11, page 249
AT+COPN	Read operator names	Section 8.1, page 200
AT+COPS	Operator Selection	Section 8.2, page 201
AT+CPAS	Mobile equipment activity status	Section 3.6, page 109
AT+CPBR	Read from Phonebook	Section 17.3, page 443
AT+CPBS	Select phonebook memory storage	Section 17.4, page 446
AT+CPBW	Write into Phonebook	Section 17.5, page 448
AT+CPIN	PIN Authentication	Section 5.1, page 129
AT+CPIN2	PIN2 Authentication	Section 5.2, page 133
AT+CPMS	Preferred SMS message storage	Section 13.12, page 388
AT+CPOL	Preferred Operator List	Section 8.15, page 228
AT+CPUC	Price per unit and currency table	Section 9.12, page 251
AT+CPWD	Change Password	Section 5.6, page 145
AT+CR	Service reporting control	Section 7.24, page 193
AT+CRC	Set Cellular Result Codes for incoming call indication	Section 7.25, page 194
AT+CREG	Network registration	Section 8.4, page 206

AT Command	Description	Section and Page
AT+CRLP	Select radio link protocol parameters for originated non-transparent data calls	Section 7.21, page 185
AT+CRSM	Restricted SIM Access	Section 14.1, page 409
AT+CSCA	SMS Service Center Address	Section 13.13, page 390
AT+CSCB	Select Cell Broadcast Message Indication	Section 13.14, page 391
AT+CSCS	Select TE character set	Section 2.13, page 56
AT+CSDH	Show SMS text mode parameters	Section 13.15, page 392
AT+CSIM	Generic SIM Access	Section 14.2, page 412
AT+CSMP	Set SMS text Mode Parameters	Section 13.16, page 393
AT+CSMS	Select Message Service	Section 13.17, page 395
AT+CSNS	Single Numbering Scheme	Section 7.26, page 195
AT+CSQ	Signal quality	Section 8.5, page 209
AT+CSSN	Supplementary service notifications	Section 9.13, page 253
AT+CUSD	Unstructured supplementary service data	Section 9.14, page 255
AT+CXXCID	Display card ID	Section 14.8, page 421
AT+FCLASS	Fax: Select, read or test service class	Section 12.2, page 360
AT+FRH	Receive Data Using HDLC Framing	Section 12.3, page 361
AT+FRM	Receive Data	Section 12.4, page 362
AT+FRS	Receive Silence	Section 12.5, page 363
AT+FTH	Transmit Data Using HDLC Framing	Section 12.6, page 364
AT+FTM	Transmit Data	Section 12.7, page 365
AT+FTS	Stop Transmission and Wait	Section 12.8, page 366
AT+GCAP	Request complete TA capabilities list	Section 2.11, page 47
AT+GMI	Request manufacturer identification	Section 6.3, page 156
AT+GMM	Request model identification	Section 6.5, page 157
AT+GMR	Request revision identification of software status	Section 6.7, page 158
AT+GSN	Request International Mobile Equipment Identity (IMEI)	Section 6.9, page 159
AT+ICF	Character Framing	Section 4.7, page 118
AT+IFC	Flow Control	Section 4.6, page 116
AT+ILRR	Set TE-TA local rate reporting	Section 4.8, page 120
AT+IPR	Bit Rate	Section 4.9, page 122
AT+VTD	Tone duration	Section 18.6, page 468
AT+VTS	DTMF and tone generation	Section 18.7, page 469
AT+WS46	Select wireless network	Section 3.7, page 110
AT\Q	Flow control	Section 4.5, page 115
AT\V	Set CONNECT result code format	Section 2.7, page 40
AT^MONI	Monitor idle mode and dedicated mode	Section 8.9, page 216
AT^MONP	Monitor neighbor cells	Section 8.10, page 219
AT^SAADC	Show ADC Adjustment Values	Section 19.8, page 516
AT^SACM	Advice of charge and query of ACM and ACMmax	Section 9.2, page 230
AT^SAIC	Audio Interface Configuration	Section 18.8, page 470
AT^SALS	Alternate Line Service	Section 8.12, page 223

AT Command	Description	Section and Page
AT^SATR	Query SIM's Answer to Reset Data	Section 14.3, page 414
AT^SBC	Battery Charge Control	Section 19.3, page 496
AT^SBV	Battery/Supply Voltage	Section 19.4, page 499
AT^SCCNT	Configure Pulse Counter	Section 20.8, page 532
AT^SCFG	Extended Configuration Settings	Section 2.14, page 57
AT^SCID	Display SIM card identification number	Section 14.7, page 420
AT^SCKS	Query SIM and Chip Card Holder Status	Section 14.5, page 417
AT^SCML	List Concatenated Short Messages from preferred store	Section 13.18, page 397
AT^SCMR	Read Concatenated Short Messages	Section 13.19, page 398
AT^SCMS	Send Concatenated Short Messages	Section 13.20, page 399
AT^SCMW	Write Concatenated Short Messages to Memory	Section 13.21, page 400
AT^SCNI	List Call Number Information	Section 7.27, page 196
AT^SCPIN	Pin Configuration	Section 20.2, page 524
AT^SCPOL	Polling Configuration	Section 20.3, page 526
AT^SCPORT	Port Configuration	Section 20.4, page 528
AT^SCSL	Customer SIM Lock	Section 5.8, page 151
AT^SCTM	Set critical operating temperature presentation mode or query temperature	Section 19.5, page 500
AT^SDLD	Delete the 'last number redial' memory	Section 17.7, page 454
AT^SDPORT	Delete a Port Configuration	Section 20.5, page 529
AT^SFDL	Enter Firmware Download Mode	Section 22.5, page 549
AT^SFNUR	Select the fixed network user rate	Section 8.8, page 215
AT^SGACT	Query all PDP context activations	Section 11.14, page 347
AT^SGAUTH	Set type of authentication for PPP connection	Section 11.15, page 349
AT^SGCONF	Configuration of GPRS related Parameters	Section 11.16, page 350
AT^SGIO	Get IO state of a specified pin or port	Section 20.6, page 530
AT^SHOM	Display Homezone	Section 8.13, page 225
AT^SHUP	Hang up call(s) indicating a specific GSM04.08 release cause	Section 7.11, page 173
AT^SICC	Internet Connection Close	Section 10.10, page 295
AT^SICI	Internet Connection Information	Section 10.2, page 265
AT^SICO	Internet Connection Open	Section 10.9, page 293
AT^SICS	Internet Connection Setup Profile	Section 10.1, page 260
AT^SIND	Extended Indicator Control	Section 3.3, page 89
AT^SISC	Internet Service Close	Section 10.6, page 285
AT^SISE	Internet Service Error Report	Section 10.12, page 299
AT^SISI	Internet Service Information	Section 10.4, page 277
AT^SISO	Internet Service Open	Section 10.5, page 279
AT^SISR	Internet Service Read Data	Section 10.7, page 286
AT^SISS	Internet Service Setup Profile	Section 10.3, page 268
AT^SISW	Internet Service Write Data	Section 10.8, page 289
AT^SISX	Internet Service Execution	Section 10.11, page 296

AT Command	Description	Section and Page
AT^SJNET	Set Dialup Network Access Parameters	Section 21.2, page 537
AT^SJOTAP	Over The Air Application Provisioning	Section 21.3, page 540
AT^SJRA	Run Java Application	Section 21.1, page 536
AT^SJSEC	Write Binary Java Security Data	Section 21.4, page 543
AT^SLCC	Extended list of current calls	Section 7.23, page 188
AT^SLCD	Display Last Call Duration	Section 7.28, page 197
AT^SLCK	Facility lock	Section 5.5, page 144
AT^SLMS	List SMS Memory Storage	Section 13.22, page 401
AT^SM20	Set M20 compatibility mode	Section 2.15, page 83
AT^SMGL	List Short Messages from preferred store without setting status to REC READ	Section 13.23, page 402
AT^SMGO	Set or query SMS overflow presentation mode or query SMS overflow	Section 13.24, page 403
AT^SMGR	Read short message without setting status to REC READ	Section 13.25, page 405
AT^SMONC	Cell Monitoring	Section 8.6, page 210
AT^SMOND	Cell Monitoring	Section 8.7, page 212
AT^SMONG	GPRS Monitor	Section 8.11, page 221
AT^SMSO	Switch off mobile station	Section 2.10, page 46
AT^SNFA	Set or query of microphone attenuation	Section 18.9, page 472
AT^SNFD	Set audio parameters to manufacturer default values	Section 18.10, page 474
AT^SNFG	Generate Tone	Section 18.11, page 475
AT^SNFI	Set microphone path parameters	Section 18.12, page 477
AT^SNFM	Set microphone audio path and power supply	Section 18.13, page 478
AT^SNFO	Set audio output (= loudspeaker path) parameter	Section 18.14, page 480
AT^SNFPT	Set progress tones	Section 18.15, page 482
AT^SNFS	Select audio hardware set	Section 18.16, page 483
AT^SNFTTY	Signal TTY/CTM audio mode capability	Section 18.17, page 486
AT^SNFV	Set loudspeaker volume	Section 18.18, page 488
AT^SNFW	Write audio setting in non-volatile store	Section 18.19, page 489
AT^SOPS	Extended Operator Selection	Section 8.3, page 204
AT^SPBC	Find first matching entry in sorted phonebook	Section 17.8, page 455
AT^SPBD	Purge phonebook memory storage	Section 17.9, page 456
AT^SPBG	Display phonebook entries in alphabetical order	Section 17.10, page 457
AT^SPBS	Step through the selected phonebook alphabetically	Section 17.11, page 460
AT^SPBW	Write into Phonebook with location report	Section 17.6, page 451
AT^SPIC	Display PIN counter	Section 5.3, page 135
AT^SPIO	General Purpose IO Driver Open/Close	Section 20.1, page 523
AT^SPLM	Read the PLMN list	Section 8.14, page 226
AT^SPWD	Change Password	Section 5.7, page 149
AT^SRADC	Configure and Read ADC Measurement	Section 19.9, page 518
AT^SRSA	Remote SIM Access Activation	Section 15.1, page 425
AT^SRSM	Remote SIM Access Message	Section 15.2, page 429

AT Command	Description	Section and Page
AT^SRTC	Ring tone configuration	Section 18.20, page 490
AT^SSCNT	Start and Stop Pulse Counter	Section 20.9, page 534
AT^SSCONF	SMS Command Configuration	Section 13.26, page 406
AT^SSDA	Set SMS Display Availability	Section 13.27, page 407
AT^SSET	Indicate SIM data ready	Section 14.6, page 419
AT^SSIO	Set IO state of a specified pin or port	Section 20.7, page 531
AT^SSMSS	Set Short Message Storage Sequence	Section 13.28, page 408
AT^SSPI	Serial Protocol Interface	Section 19.7, page 506
AT^SSTA	SAT Interface Activation	Section 16.1, page 435
AT^SSTGI	SAT Get Information	Section 16.3, page 438
AT^SSTR	SAT Response	Section 16.4, page 439
AT^SSYNC	Configure SYNC Pin	Section 19.6, page 503
AT^STCD	Display Total Call Duration	Section 7.29, page 198
AT^STPB	Transmit Parity Bit (for 7E1 and 7O1 only)	Section 4.11, page 128
AT^SWDAC	Configure and Read PWM Signal for DAC	Section 19.10, page 521
AT^SXSM	Extended SIM Access	Section 14.4, page 415
ATA	Answer a call	Section 7.2, page 162
ATA	Manual response to a network request for PDP context activation	Section 11.17, page 351
ATD	Mobile originated call to specified number	Section 7.3, page 163
ATD*98#	Request GPRS IP service	Section 11.19, page 353
ATD*99#	Request GPRS service	Section 11.18, page 352
ATD><mem><n>	Mobile originated call using specific memory and index number	Section 7.4, page 165
ATD><n>	Mobile originated call from active memory using index number	Section 7.5, page 167
ATD><str>	Mobile originated call from active memory using corresponding field	Section 7.6, page 168
ATDI	Mobile originated call to ISDN number	Section 7.7, page 169
ATDL	Redial last number used	Section 7.8, page 170
ATE	Enable command echo	Section 4.1, page 111
ATH	Disconnect existing connection	Section 7.9, page 171
ATH	Manual rejection of a network request for PDP context activation	Section 11.20, page 354
ATI	Display product identification information	Section 6.1, page 155
ATL	Set monitor speaker loudness	Section 18.2, page 465
ATM	Set monitor speaker mode	Section 18.3, page 465
ATO	Switch from command mode to data mode / PPP online mode	Section 7.18, page 181
ATP	Select pulse dialing	Section 7.30, page 199
ATQ	Result code presentation mode	Section 2.4, page 37
ATS0	Set number of rings before automatically answering a call	Section 7.12, page 175
ATS0	Automatic response to a network request for PDP context activation	Section 11.21, page 355

AT Command	Description	Section and Page
ATS10	Set disconnect delay after indicating the absence of data carrier	Section 7.17, page 180
ATS18	Extended call release report	Section 3.5, page 107
ATS2	Set escape sequence character	Section 7.13, page 176
ATS3	Set command line termination character	Section 22.2, page 546
ATS4	Set response formatting character	Section 22.3, page 547
ATS5	Write command line editing character	Section 22.4, page 548
ATS6	Set pause before blind dialing	Section 7.14, page 177
ATS7	Set number of seconds to wait for connection completion	Section 7.15, page 178
ATS8	Set number of seconds to wait for comma dialing modifier	Section 7.16, page 179
ATT	Select tone dialing	Section 7.31, page 199
ATV	Result code format mode	Section 2.5, page 38
ATX	Set CONNECT result code format and call monitoring	Section 2.6, page 39
ATZ	Set all current parameters to user defined profile	Section 2.8, page 41